Robinsons
ALUMINIUM GREENHOUSES

Victorian 'REIGATE' 11
Assembly Instructions

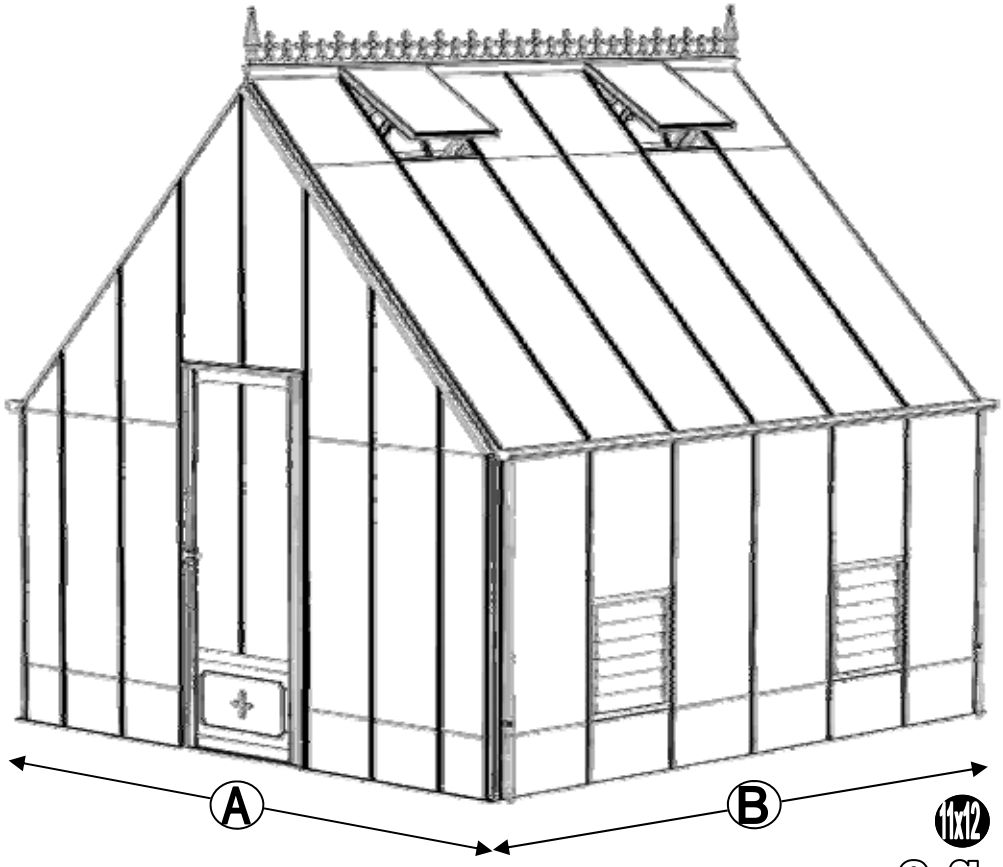

e.g.

NOMINAL SIZE	A (mm)	B (mm)
11 x 6	3536	2012
11 x 8		2632
11 x 10		3252
11 x 12		3872

Issue 1.1

GB

Thank you for purchasing your new Robinsons greenhouse. We recommend you familiarise yourself with the instructions and read all safety information before you commence assembly. This instruction manual is also available online at www.robinsonsgreenhouses.co.uk in our technical help section should you need to reprint it. Should you require any additional advice you can always call us on 01782 385409.

These instructions are divided into sections highlighted by a white number/letter on a black background at the bottom corner of most pages (see opposite page for details); **part lists**, **B**-base, **P**-preparation, **1**-sides, **2**-front gable, **3**-rear, **4**-joining the four sides together, **5**-louvre, **6**-roof, **7**-vent, **8**-glazing, **9**-vent attachment, **10**-door attachment, **11** anchoring down, **12** finishing touches, **13** optional shelf, **14** optional staging. If you need to contact us for assistance please refer to the relevant section/s. If your building is longer than 12', i.e. has an extension then please also refer the separate extension manual.

Safety Warning

- Glass and aluminium can potentially cause injury. Please ensure you wear protective goggles, gloves, headgear and suitable footwear when assembling and glazing the building.
- Please remember that glass is fragile and should be handled with extreme care. Always clear up and dispose of any breakages immediately.
- Do not assemble the greenhouse in high winds.
- For safety reasons and ease of assembly, we recommend that this greenhouse is assembled by a minimum of two people.
- Please clear all lying snow from the greenhouse roof as it can cause the roof to buckle or collapse.

Site Preparation

- When selecting a site for your greenhouse, it is vital that you choose as flat and level an area as possible.
- A concrete or slabbed base will provide the most solid foundation for your greenhouse.
- IMPORTANT: Do **not** fix your building down until the building is fully assembled, including glazing.
- Avoid placing your greenhouse under trees or in other vulnerable locations.
- To minimise the risk of wind damage, try to select as sheltered a site as possible, e.g. beside a hedgerow or garden fence.

Additional Considerations

- Please bear in mind that assembling your greenhouse can be time consuming. You may need to spread the construction over two or more days. We recommend that you avoid leaving the building partially glazed. If you ever have to leave your greenhouse half assembled and not anchored down, weigh it down with slabs or bags of sand to stop the wind moving it.
- You will find it helpful to prepare a large, clean and clear area in which to work in. A garage floor or flat lawn area is ideal.
- If you have arranged for someone to install your greenhouse for you, please check that all components are included. Some parts are numbered and can be identified by a stamped or hand written number (without the 'D'). Alternatively, the components can be identified by their distinctive profiles, lengths and quantities detailed in the parts list (see next page).
- Anchoring down your greenhouse should be the final stage of construction (including glazing).
- Once installed your greenhouse requires little maintenance, but to maintain the smooth running of your door(s) WD40 or similar can be applied to the door pivot pins / lock etc...

Guarantee

- Your new Robinsons greenhouse is guaranteed for 10 years against faulty manufacture of the framework. This does not include glazing, moving parts, accidental damage or wind damage.

KEY SYMBOL	KEY DESCRIPTION
	EXTERNAL VIEW
	INTERNAL VIEW
	THINK
	THIS SECTION RELATES TO ANOTHER (e.g. 1 to 5)
	CORRECT
	DO NOT FIX DOWN!
	TWIST TO LOCK
	TIGHTEN
	PUSH AND HOLD
	CUT TO LENGTH

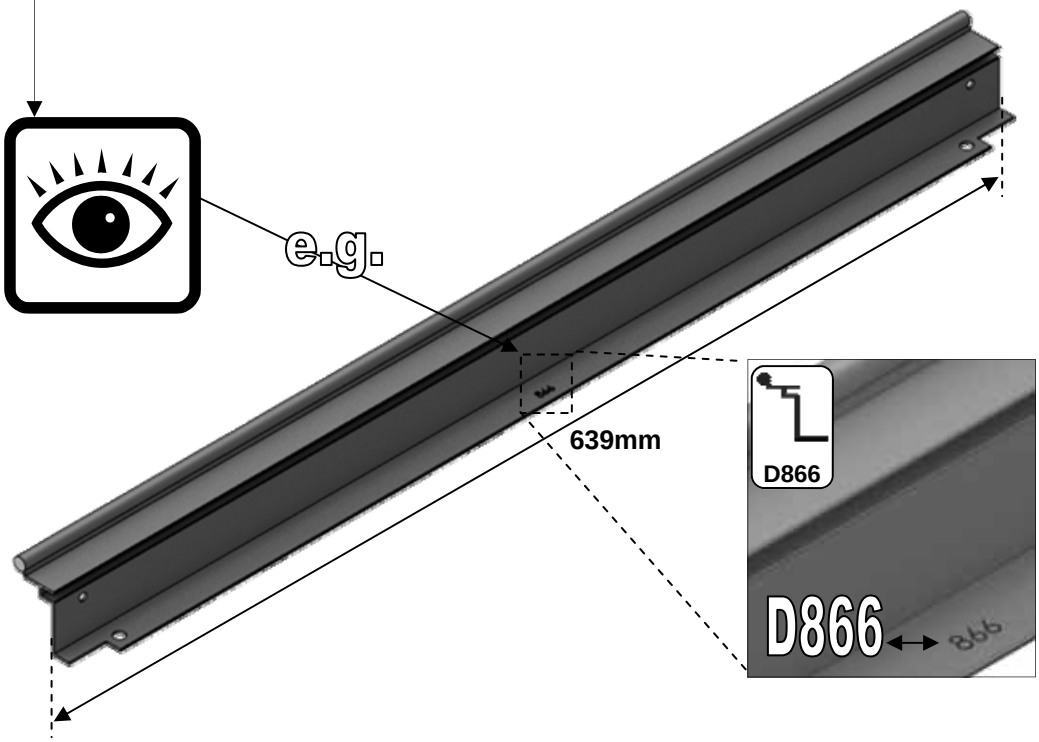

SECTION No	TITLE	ASSEMBLY SYNOPSIS: IMPORTANT INFORMATION / CONSIDERATIONS
	PARTS LIST	Most components should have a 'D' code punched into their metal surface. Identify and separate all like for like components prior to assembly. The 'parts list' also separates parts into the various sections 1 - 12 shown below. Parts can also be identified by their profile pictures and stated lengths etc..
B	BASE	Base dimensions and recommendations. Ensure that your base is level as this will make assembly of the building, especially the glazing of the roof much more straight forward. Please be aware that the hinge door on your greenhouse opens inwards, make sure that there will be no interference between the door and the foundations.
P	PREPARATION	Tools required. IMPORTANT: Use WD40 or similar in the glazing bar channels and insert the black glazing rubber prior to frame assembly.
1	SIDES	Take the side glazing bars 'D066' with the rubber inserted and the diagonal braces 'D103', use 10mm bolts to join them to the gutter and 15mm bolts to the cills (note how the head of the bolt slides into each glazing bar during construction). Please also remember to slide in your 22mm bolts for attaching the decorative eave spandrels 'DV100' in section 5.
2	FRONT	Again ensuring that the gable framework is rubbered-up follow the diagrams to assemble each end of the building. Make sure that you have inserted the extra bolts utilised in sections 4 and 5. On the roof and side corner bars not every rubber channel will require rubber unless it is to be utilised in a partition (see separate manual and section P).
3	REAR	
4	JOINING THE FOUR SIDES	Take the two sides (1) and both gables (2 & 3) and join them together on your base. It is a good idea to tie some ladders to the sides to support them if you do not have anyone to hold them for you.
5	LOUVRE	They attach to the building during the glazing process (8) like a piece of glass with a black separator above and below them. If you are fitting an optional auto-louvre then you need to carefully drill (3mm bit) out the rivets which mount the handle to the frame. You can then either utilise those holes or create more to mount the unit.
6	ROOF	Attach the ridge and then the rubbered-up roof bars ensuring that they are fully butted up to the ridge and down onto the gutter. Attach your cresting before you glaze the building to give yourself more room to work. Utilise the 22mm bolts slid into the side (section 1) and roof bars to attach your DV100 and DV101 spandrels. On longer models you may need to carefully prop up the roof and tie the sides together to keep the ridge and gutters straight (i.e. not sagging or bowed) until the building is fully glazed.
7a	VENT	Once the vent is glazed add silicone to the vent sides and top. Stand the vent/s on their hinge (vent top) and then leave the silicone to set.
7b	VENT SLAM	The slam bar 'D079' can be moved up and down between the roof glazing bars so that it can be butted down onto the pane of glass beneath, the autovent will be attached to it later on (9).
8	GLAZING	Layout the bar cappings and covers around the building like a sundial checking that all is present and correct. You can also place the roof cappings in the gutters so they are closer to hand. The glass in the sides has to bevel on the black separator strip which is on top of the 305mm high glass base panels. This bevelling action allows the glass to tuck underneath the gutter canopy. Use the capping and the self tapping screws to then hold the glass in place. The covers then enclose the screw heads giving a neat finish. It is a good idea to glaze two roof sections first to ensure the building is square followed by two side sections to ensure the building isn't leaning. IMPORTANT: On the roof sections please make sure that you place a screw around 25mm / 1" from the bottom of each capping strip (create a hole in the plastic if required) and that the screws are nice and tight to avoid any glass slippage.
9	VENT ATTACHMENT	Take the assembled vent and slide the vent hinge 'D866' into the end of the ridge allowing the vent the pivot open and closed. Vent stops go either side of the vent to stop any lateral movement (so insert stop / vent / stop). Attach the Bayliss XL autovents.
10	DOOR ATTACHMENT	Your door comes pre-constructed and locked minus the handles and their pivot pin but now it needs to be mounted to the front end of your building. Utilise the 'DV522' plates and twist in crop headed bolts to join the door and its frame to the building (pinch the door frame against your long front verticals whilst tightening your 'DV522' plates to ensure that there is no gap). If you are struggling to eradicate the gap between the door frame and verticals then some silicone can be carefully applied to the area to create a vertical seal. Be careful not to lock yourself in the building and to avoid damage do not open the door until it is attached to the front gable. Getting the door to swing perfectly without dropping or rubbing on the ground may require some small but vital adjustments. You may also need to insert a packer underneath the door frame hinge to increase ground clearance. Part 'DV275' canopies the door frame top hiding the clearance space at the top of the door. The door can only be made to swing inwards. IMPORTANT: Please do NOT let the door slam open or closed as it is likely to cause damage to the door and the frame. Please twist the handle to open and close. Please also be aware that your door KEYS (3 provided) are unique to the building so they should not be stored together.
11	ANCHORING DOWN	Now that the greenhouse is finished and the door and vent/s are operating without interference then you need to anchor the building down using 2" rawl plugs and screws. Use a 7mm masonry bit in a hammer drill to create the holes.
12	FINISHING TOUCHES	Now that the main body of the structure is complete you can add; downpipe fittings, eave bungs, gutter stop ends. It is also important to carefully apply some silicone to the internal eaves corners and external and internal ridge corners to minimise the chance of water entering the structure.
13	OPTIONAL SHELVING	Robinsons integral cantilever staging and shelving attaches to the inside of the greenhouse frame using either square head bolts (insert four into each side glazing bar 'D066' during construction of the sides (1)) or rectangular 'crop head' bolts which can be fitted retrospectively (both sets of bolts accompany the shelving/staging). This system allows the height of either the staging or the shelf to be set at an operator specific height. Commonly the staging brackets are set 900mm from the cills though you can alter this to suit the end user/s. The aluminium shelf / staging slats come in two lengths; (4'):1240mm 'D2002' and (6'):1860mm 'D2003'. These slats can combine to create any length of staging required, i.e. 4'+6' = 10' etc...
14	OPTIONAL STAGING	

11' Victorian

Section Ref	Part No.	Section	Size (mm)	11 6	11 8	11 10	11 12
1	D043		1894	2			
	D021		2514		2		
	D022		3134			2	
	D023		3754				2
	DV213		1897	2			
	DV210		2517		2		
	DV211		3137			2	
	DV212		3757				2
	D103		1787	4			
	D066		1676	4	6	8	10
	RUBBER		1000 (1m)	14	21	27	34
	D174		N/A	4	4	8	8

Section Ref	Part No.	Section	Size (mm)	11 6	11 8	11 10	11 12
2 + 3	DV232		3548	1			
	DV226L		1322	1			
	DV226R			1			
	D048		1676	4			
	DV235L		2021	2			
	DV235R			2			
	DV237L		2489	2			
	DV237R			2			
	DV239L		2960	2			
	DV239R			2			
	DV262		3395	1			
	DV271L		1249	1			
	DV271R			1			
	DV268		964	2			
	DV274		3402	1			
	DV292		1794	4			
	DV252L		2451	2			
	DV252R			2			
	DV264		1398	1			

Section Ref	Part No.	Section	Size (mm)	11 6	11 8	11 10	11 12
2 + 3	DV275		904	1			
	D163		90	2			
	DV104		N/A	4			
	DV105		N/A	2			
	RUBBER		1000 (1m)	94			
	D174		N/A	13			

Section Ref	Part No.	Section	Size (mm)	11 6	11 8	11 10	11 12
5	DV204		1897	1			
	DV201		2517		1		
	DV202		3137			1	
	DV203		3757				1
	DV255		2450	4	6	8	10
	RUBBER		1000 (1m)	20	30	40	50

Section Ref	Part No.	Section	Size (mm)	11 6	11 8	11 10	11 12
6	D866		639	2	2	4	4
	D863L		613	2	2	4	4
	D863R		613	2	2	4	4
	D862		593	2	2	4	4
	D079 PLUS FLUFF		590	2	2	4	4
	D114		N/A	4	4	8	8
	D220 PLUS FS6060 SCREW		N/A	4	4	8	8
	D205		N/A	4	4	8	8

Section Ref	Part No.	Section	Size (mm)	11 6	11 8	11 10	11 12
8	5	D870	601	4	6	8	10
	10	DV479	1384	1			
	2/3	DV635L/R	2021	2 + 2			
	2/3	DV637L/R	2489	2 + 2			
	2/3	DV639L/R	2960	2 + 2			
	5	DV655	1880	4	6	8	10
	3	DV662	3395	1			
	2 / 10	DV664	1373	1			
	1	D812	1660	4	6	8	10
	2/3	D813	1675	4			
	1	D834	1660	4			
	5	D871	601	4			
	5	DV652	1871	4			
	1	D825	1660	8	10	12	14
	2/3	D826	1677	4			
	10	DV480	1384	1			
	2/3	DV636L/R	2021	2 + 2			
	2/3	DV638L/R	2489	2 + 2			
	2/3	DV640L/R	2960	2 + 2			
	5	DV658	2481	8	10	12	14
	3	DV668	3395	1			
	2 / 10	DV670	1373	1			

10	D522		N/A	10

12	D119	SILICONE	N/A	1
	DV120		N/A	4
	D841		N/A	2
	D211	PIPE	1625	2
	D207		N/A	2
	D214		N/A	2
	D201		N/A	2
	D208		N/A	2

Section Ref	Part No.	Section	Size (mm)	11 6	11 8	11 10	11 12
12	DV219		N/A	2			
	DV218		N/A	2			

MAIN FRAME QUANTITIES VENTS / DOORS etc SEPERATE		SYBOLM6X11 10mm	84	90	96	102
		SYBOLM6X15 15mm	33	35	37	39
		SYBOLM6X22 22mm	24	36	48	60
		SYNUTM6 M6 NUT	141	161	181	201

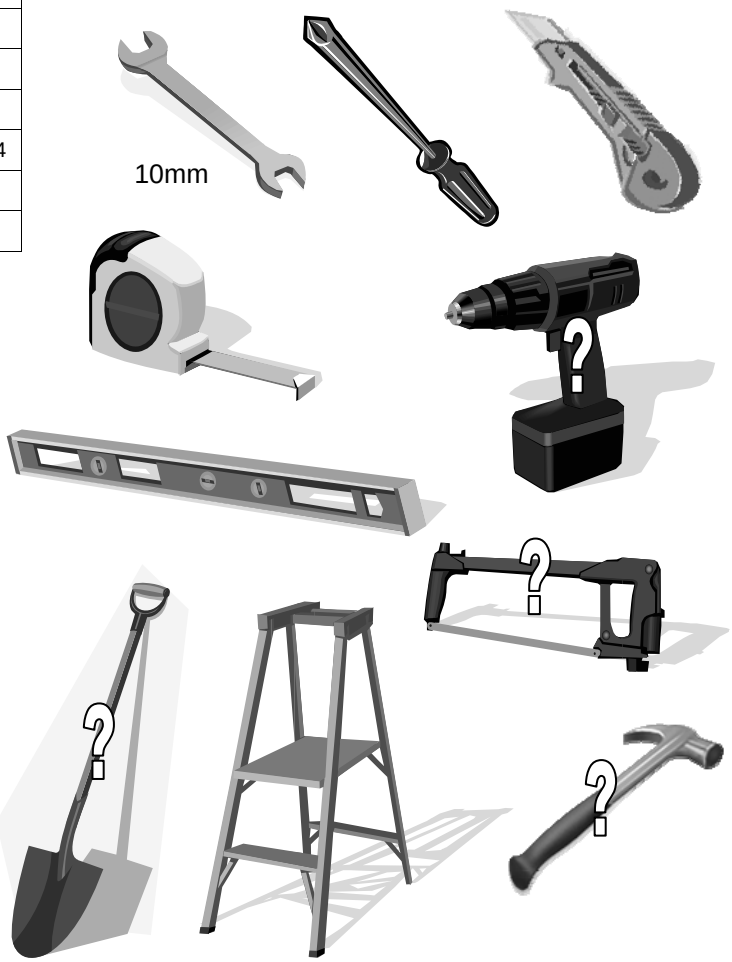

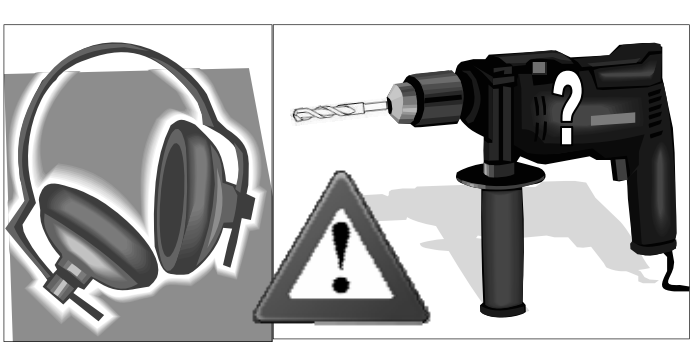

THE DIMENSIONS BELOW ARE THE EXACT EXTERNAL BASE DIMENSIONS FOR THE ROBINSONS RANGE.

We cannot emphasis how important it is to have a proper base for your Robinsons Greenhouse to be erected upon.

It is essential that the **BASE IS FLAT, LEVEL AND SQUARE AS WELL AS BEING SUBSTANTIAL** enough to take the weight of the greenhouse including its 4mm glass.

Give yourself enough room around your base to allow for fitting the glass and any on-going maintenance / cleaning. A slab base which is larger than the greenhouse is the ideal solution and is our preferred foundation.

A brick perimeter base is equally suitable providing there is a concrete foundation beneath it. We suggest using a solid brick with no frogs or holes (quality stock bricks or semi-engineering bricks).

IMPORTANT: Do not anchor your greenhouse down until it is fully assembled including glazing unless you are 100% sure your base is square and level. If not your glass will not fit properly.

IMPORTANT: If you have anything overhanging the ridge on a lean-to building then please make sure it does not interfere with the motion of the roof vents.

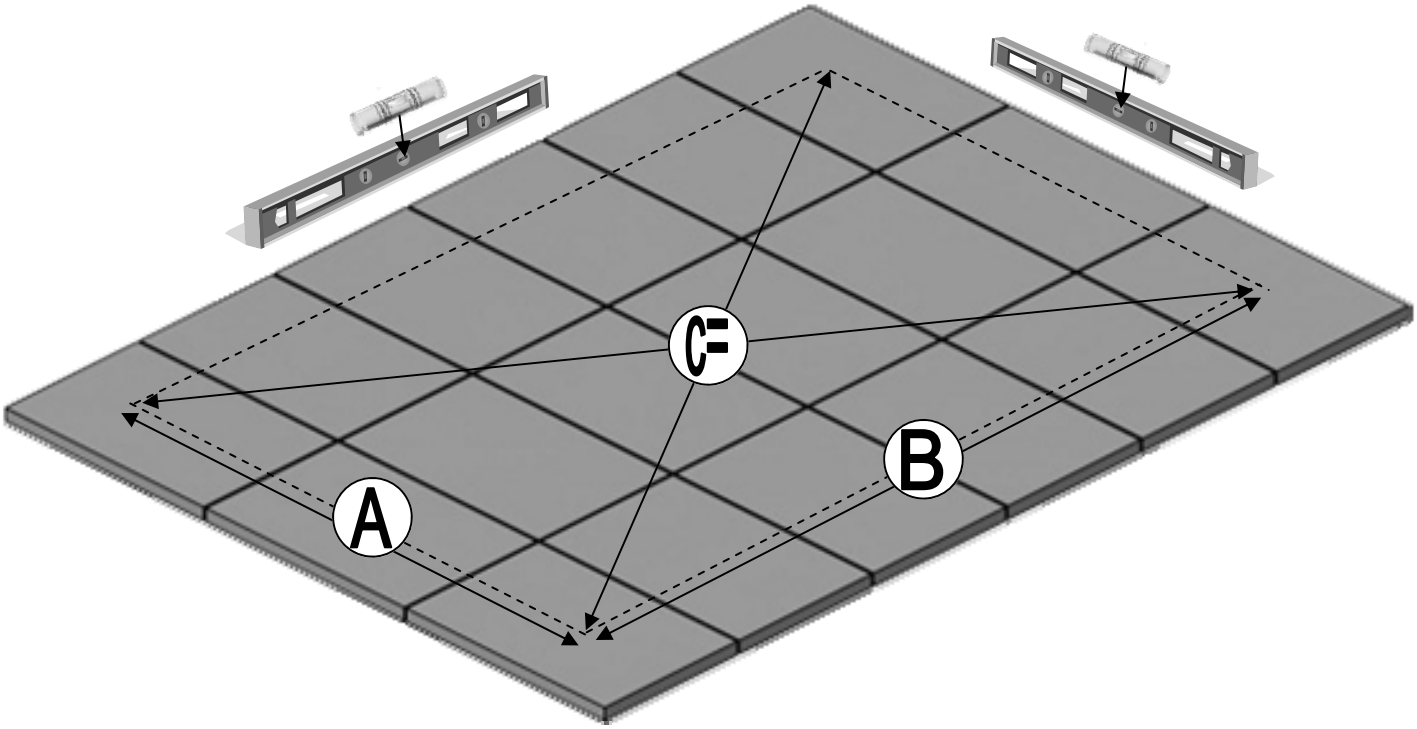

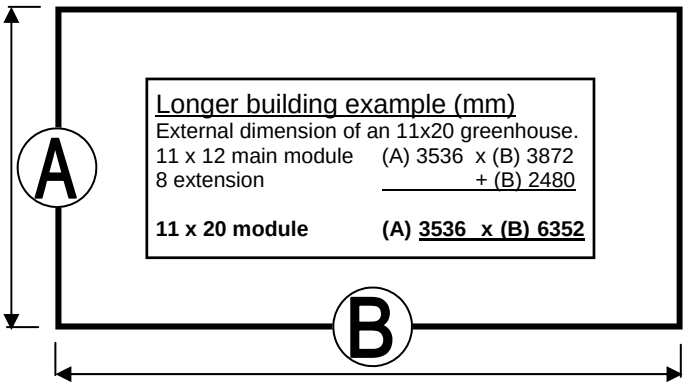

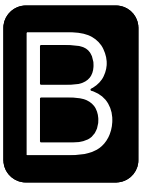

EXTERNAL DIMENSIONS (mm)

Model sizes listed are **nominal**,
use 'mm' measurements.
i.e.: an 11 x 10 is the model 11'7" x 10' 8"

MODEL		A (mm) WIDTH	B (mm) LENGTH	C (mm) DIAGONAL
11 REIGATE VICTORIAN	11 x 6	3536	2012	4068
	11 x 8		2632	4408
	11 x 10		3252	4804
	11 x 12		3872	5244
EXTENSIONS	6ft ext.	-	1860	-
	8ft ext.	-	2480	-
	10ft ext.	-	3100	-
	12ft ext.	-	3720	-

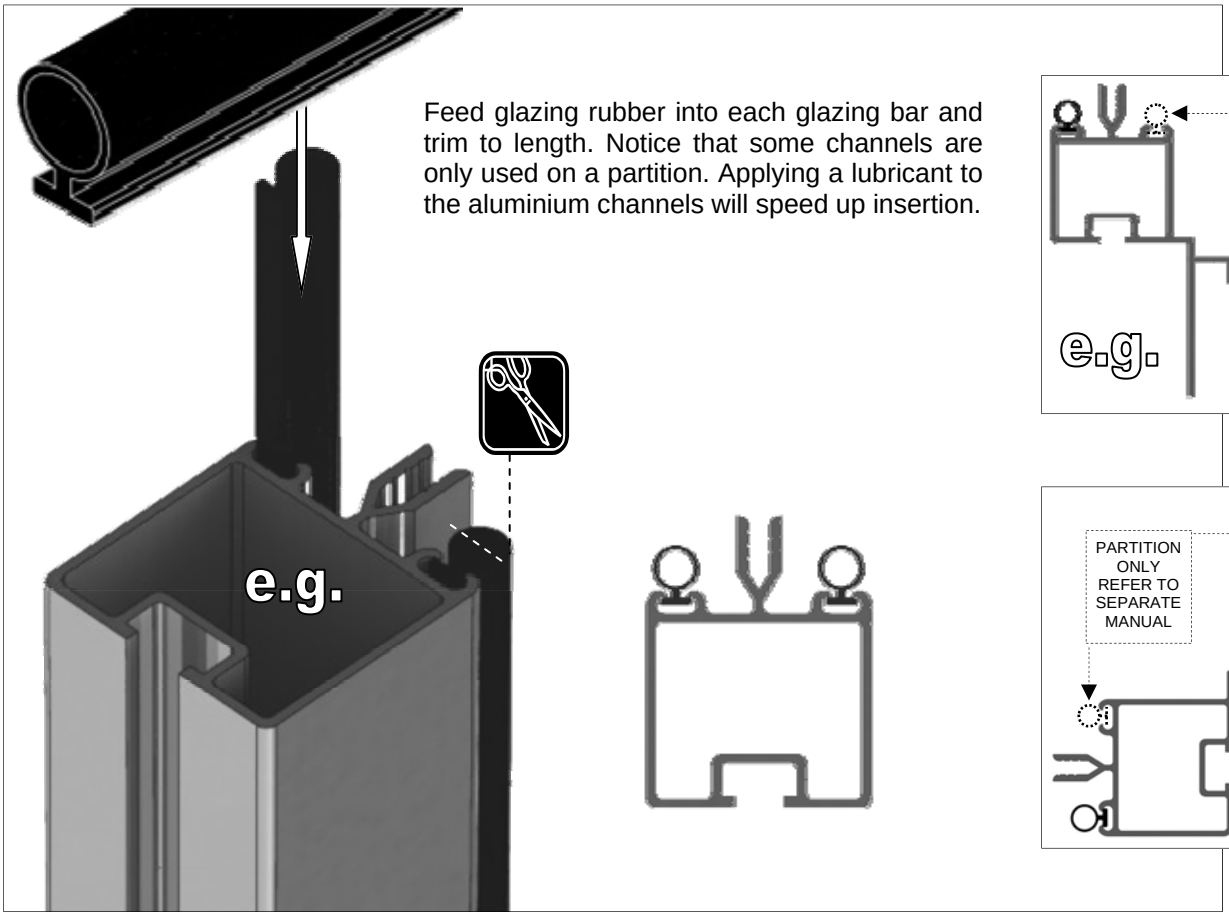

Feed glazing rubber into each glazing bar and trim to length. Notice that some channels are only used on a partition. Applying a lubricant to the aluminium channels will speed up insertion.

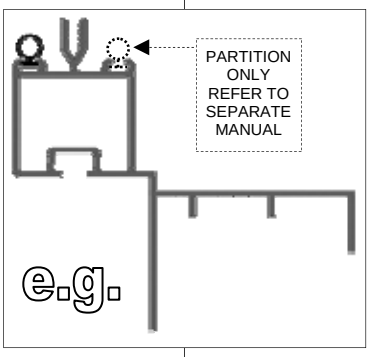

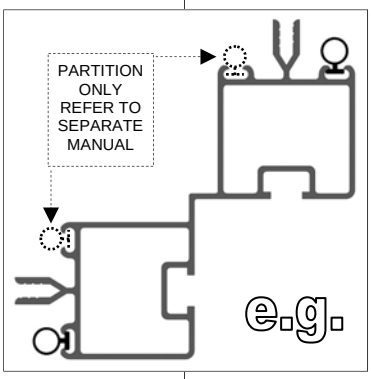

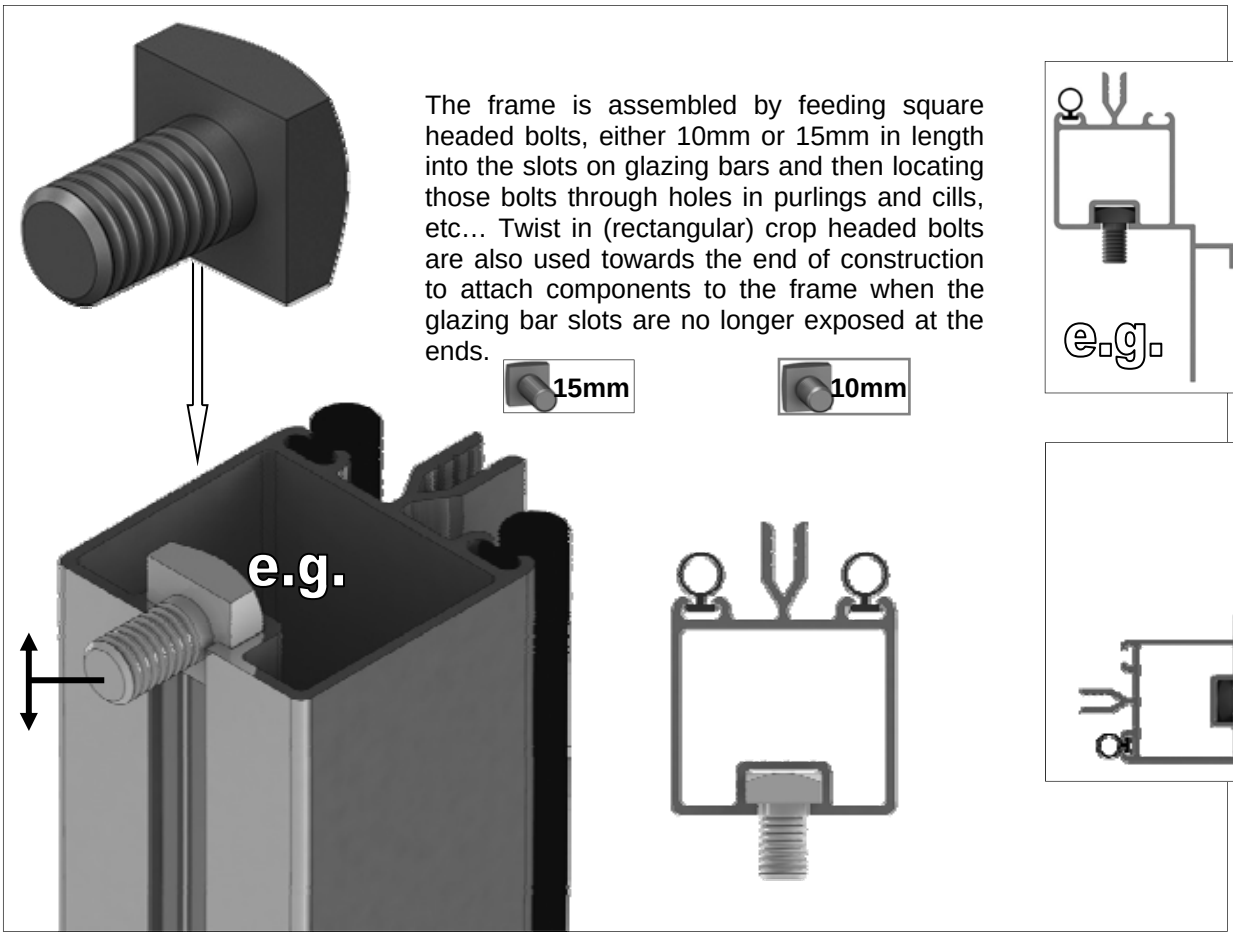

The frame is assembled by feeding square headed bolts, either 10mm or 15mm in length into the slots on glazing bars and then locating those bolts through holes in purlings and cills, etc… Twist in (rectangular) crop headed bolts are also used towards the end of construction to attach components to the frame when the glazing bar slots are no longer exposed at the ends.

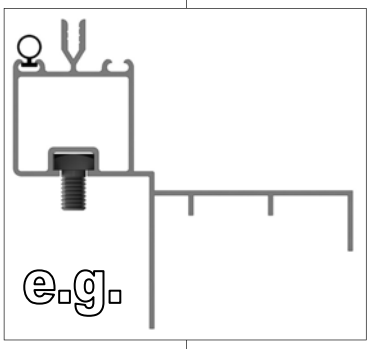

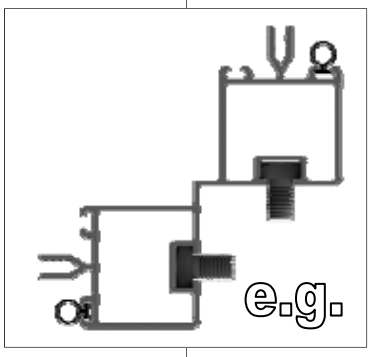

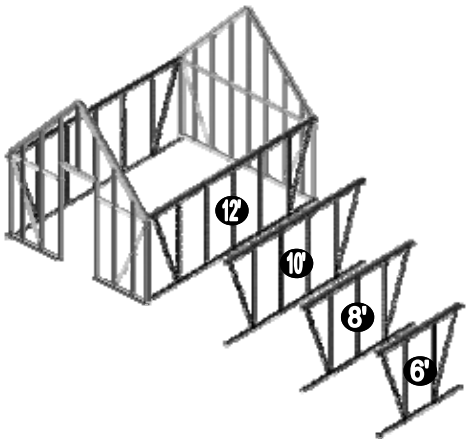

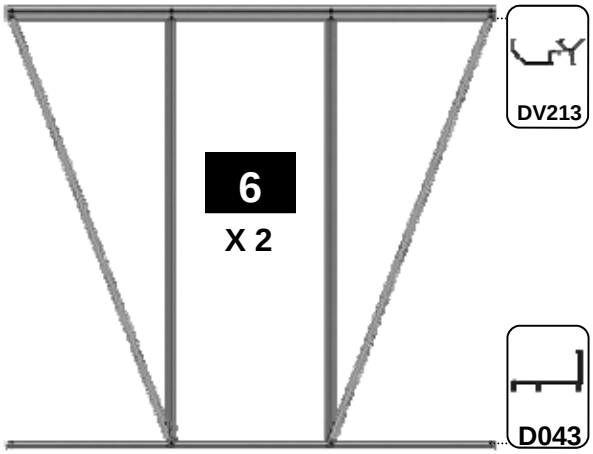

6 X 2		
Part No	mm	Quantity
DV213	1897	2
D043	1894	2
D066	1676	4
D103	1787	4
D174		4
SYBOLM6X11		4
SYBOLM6X15		8
SYBOLM6X22		8
SYNUTM6		12
Rubber	1000	14

e.g.1

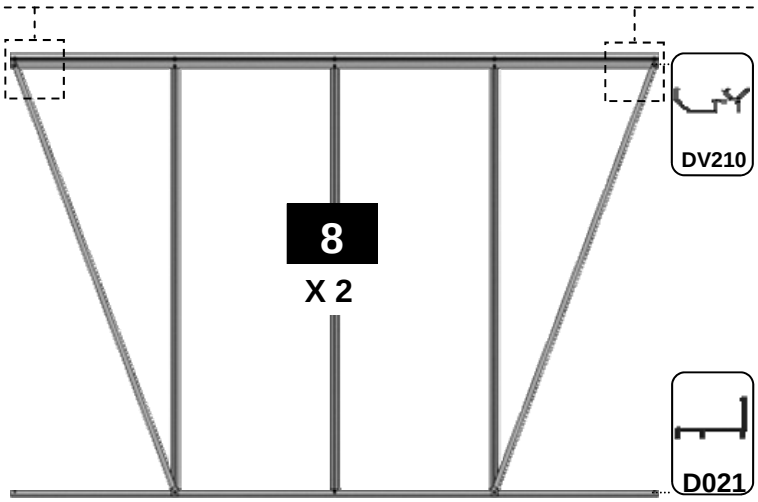

8 X 2		
Part No	mm	Quantity
DV210	2517	2
D021	2514	2
D066	1676	6
D103	1787	4
D174		4
SYBOLM6X11		6
SYBOLM6X15		10
SYBOLM6X22		12
SYNUTM6		16
Rubber	1000	21

e.g.2

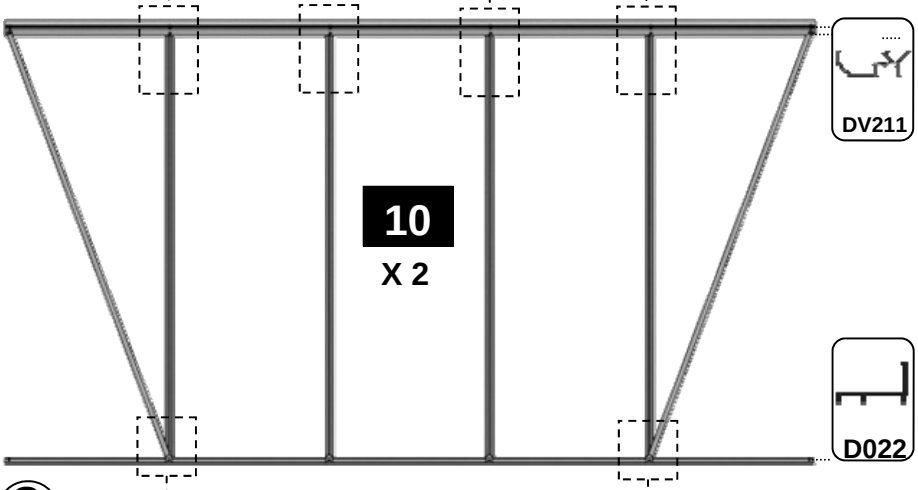

10 X 2		
Part No	mm	Quantity
DV211	3137	2
D022	3134	2
D066	1676	8
D103	1787	4
D174		8
SYBOLM6X11		8
SYBOLM6X15		12
SYBOLM6X22		16
SYNUTM6		20
Rubber	1000	27

e.g.3

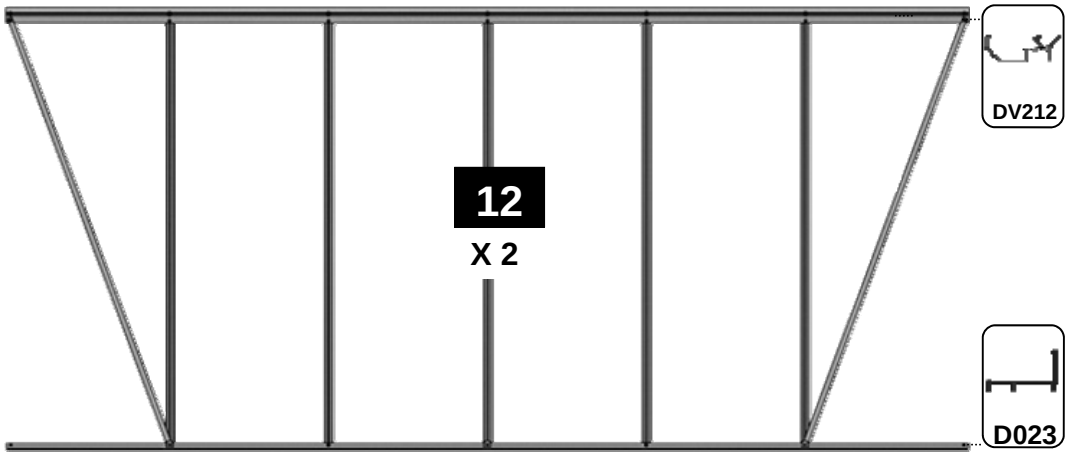

12 X 2		
Part No	mm	Quantity
DV212	3757	2
D023	3754	2
D066	1676	10
D103	1787	4
D174		8
SYBOLM6X11		10
SYBOLM6X15		14
SYBOLM6X22		20
SYNUTM6		24
Rubber	1000	34

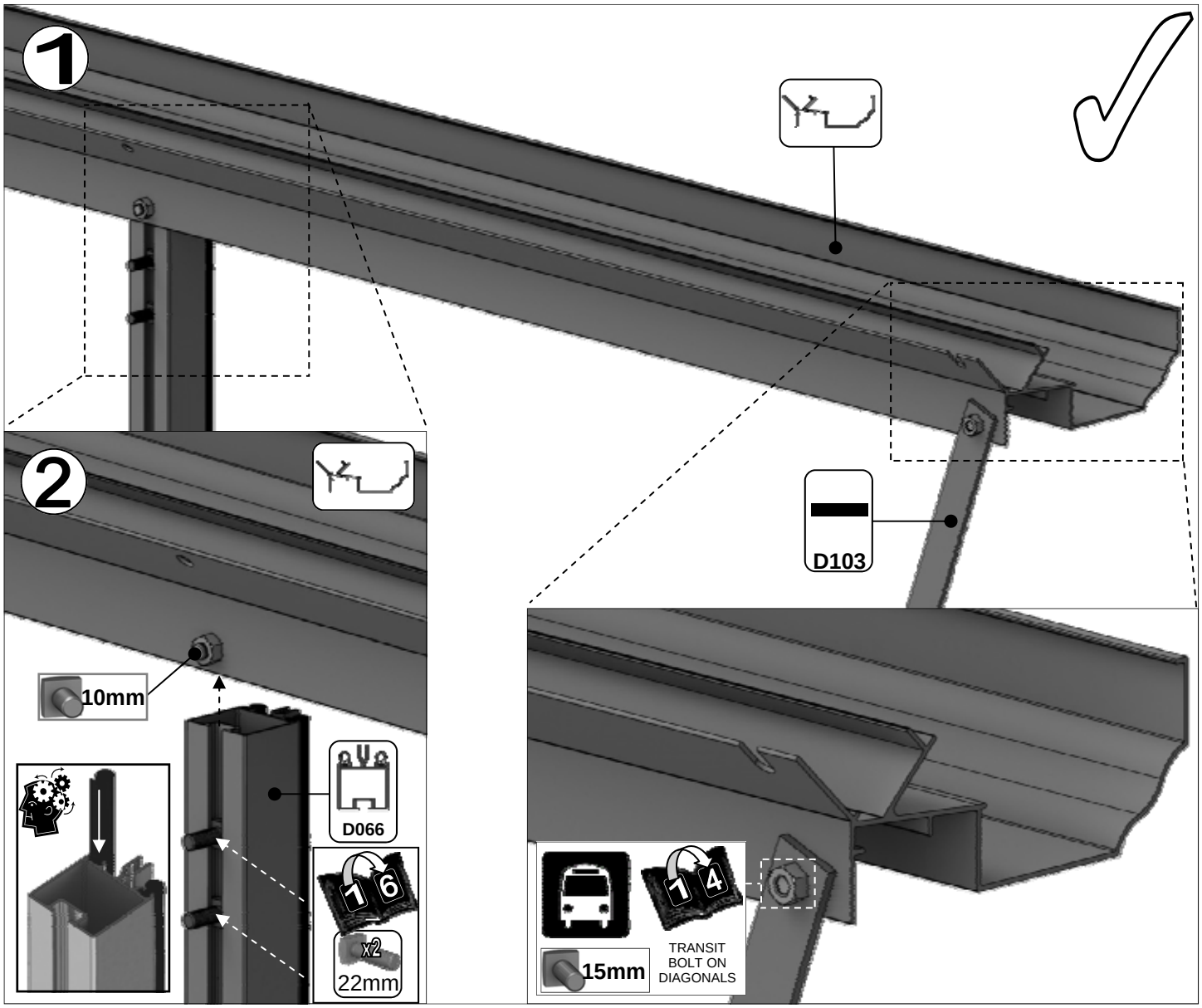
1
D103
2
10mm
D066
1 6
x2
22mm
1 4
15mm
TRANSIT
BOLT ON
DIAGONALS

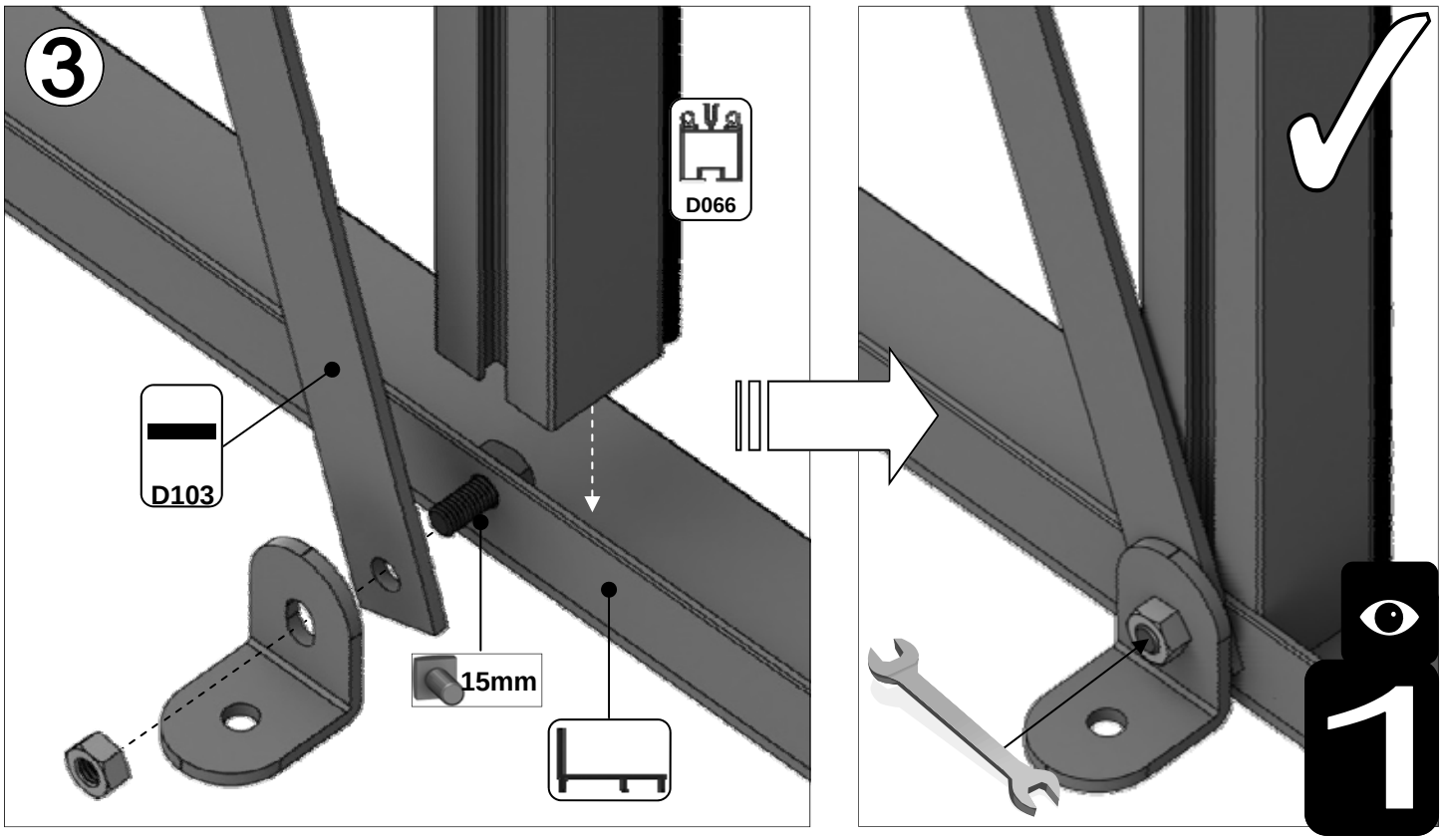
3
D066
D103
15mm
1

11’ full front

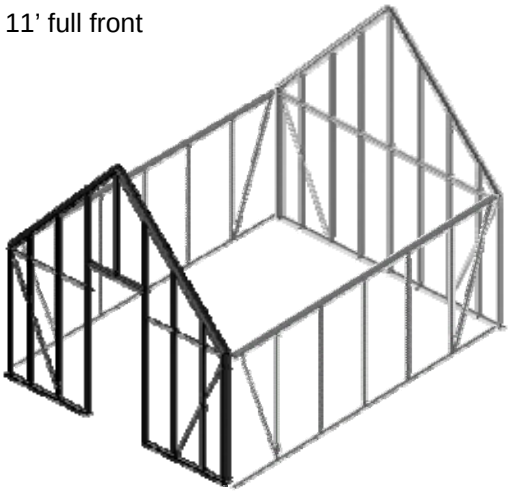

Part No	mm	Quantity
D048	1676	2
DV226L	1322	1
DV226R	1322	1
DV235L	2021	1
DV235R	2021	1
DV237L	2489	1
DV237R	2489	1
DV239L	2960	1
DV239R	2960	1
DV252L	2451	1
DV252R	2451	1

Part No	mm	Quantity
DV264	1398	1
DV268	964	1
DV271L	1249	1
DV271R	1249	1
DV275	904	1
DV292	1794	2
D163		2
DV104		2
DV105		1
D174		6
D227		45m
M6X10		39
M6X15		12
M6NUT		51

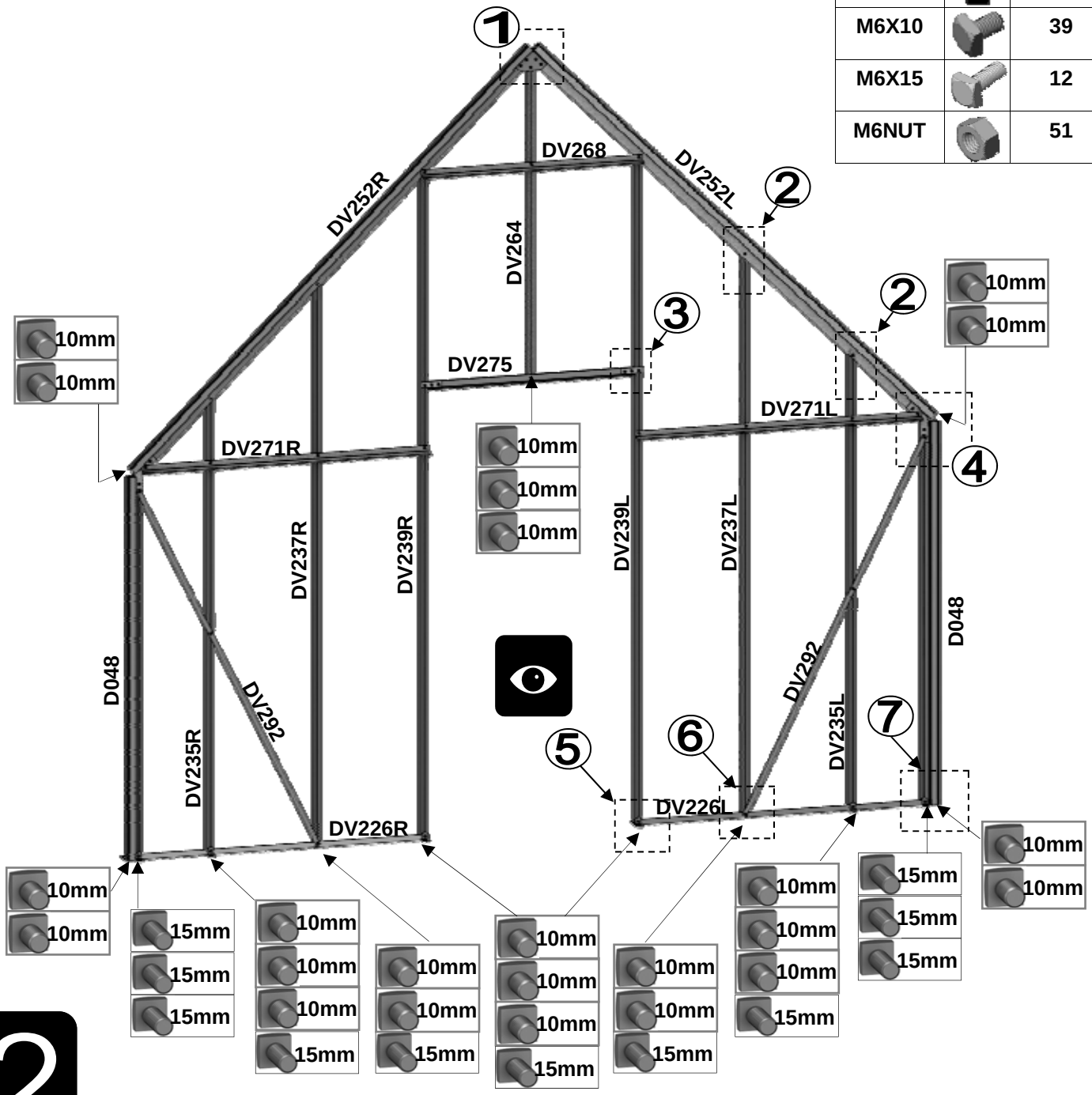

2

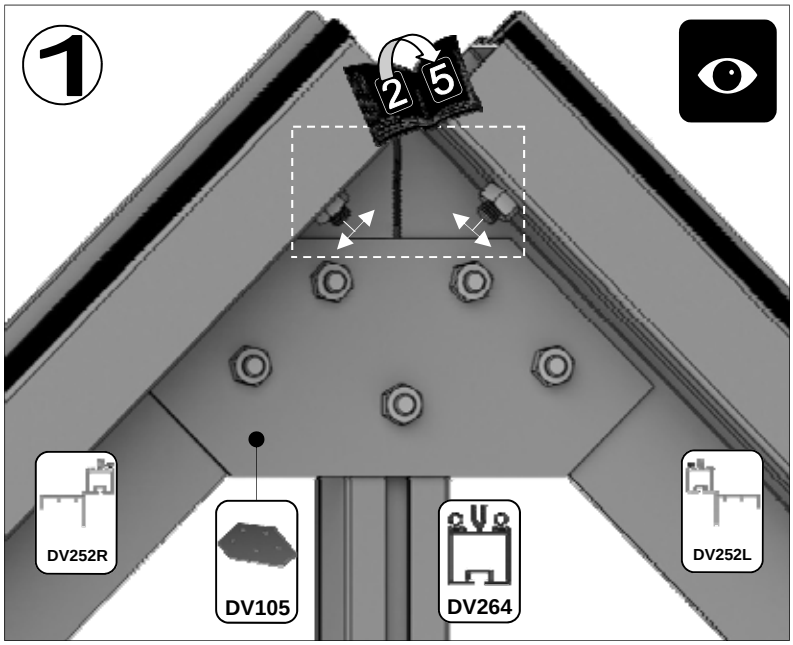
1
2
5
DV252R
DV105
DV264
DV252L

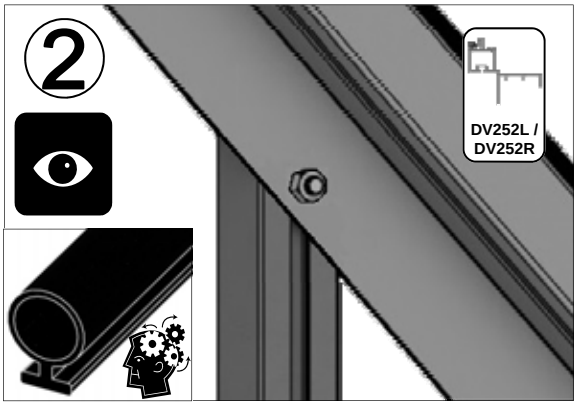
2
DV252L /
DV252R

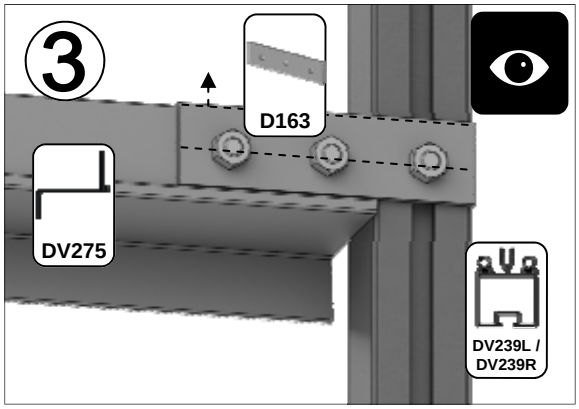
3
D163
DV275
DV239L /
DV239R

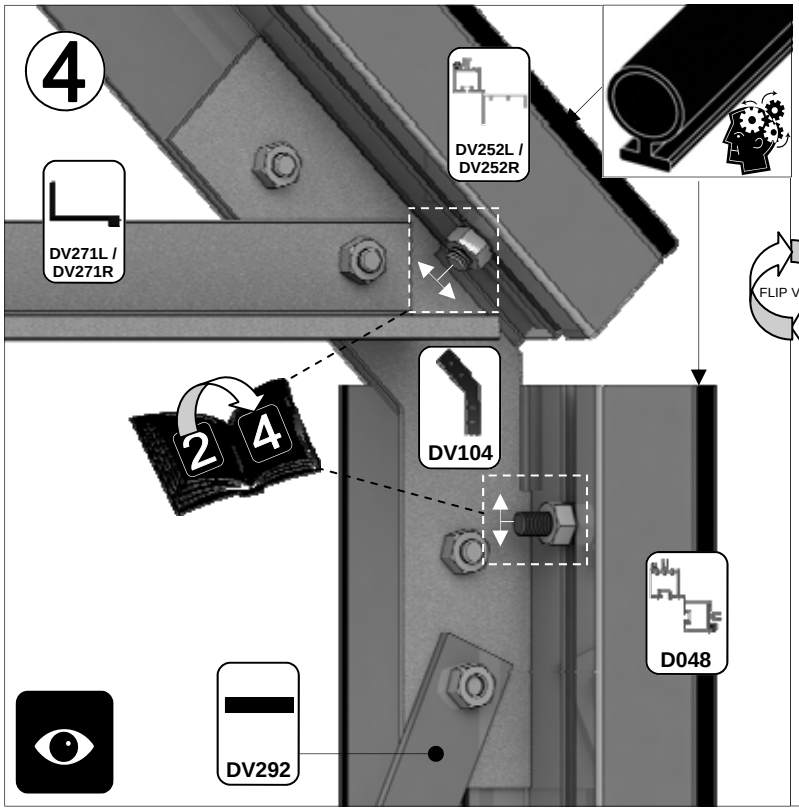
4
DV252L /
DV252R
DV271L /
DV271R
2
4
DV104
D048
DV292

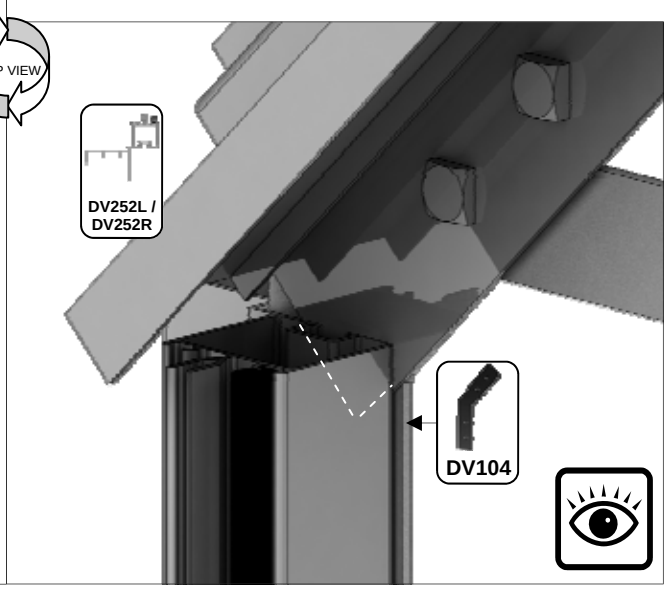
FLIP VIEW
DV252L /
DV252R
DV104

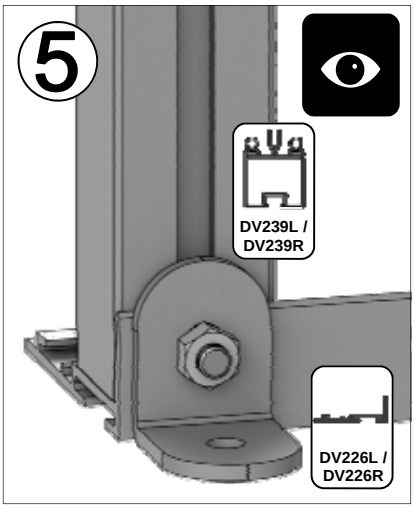
5
DV239L /
DV239R
DV226L /
DV226R

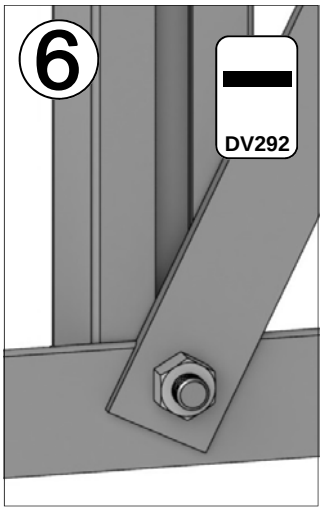
6
DV292

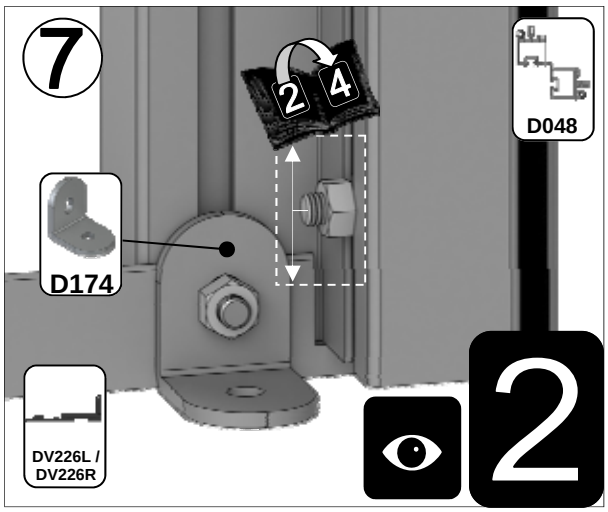
7
2
4
D048
D174
DV226L /
DV226R
2

11’ full rear

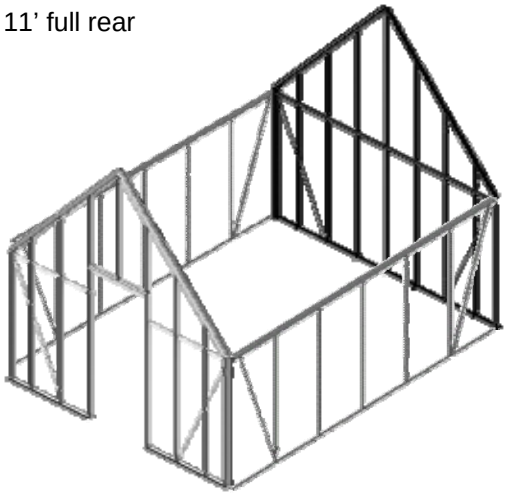

Part No	mm	Quantity
D048	1676	2
DV232	3548	1
DV235L	2021	1
DV235R	2021	1
DV237L	2489	1
DV237R	2489	1
DV239L	2960	1
DV239R	2960	1
DV252L	2451	1
DV252R	2451	1
DV262	3395	1

Part No	mm	Quantity
DV268	964	1
DV274	3402	1
DV292	1794	2
DV104		2
DV105		1
D174		7
D227		49m
M6X10		33
M6X15		13
M6NUT		46

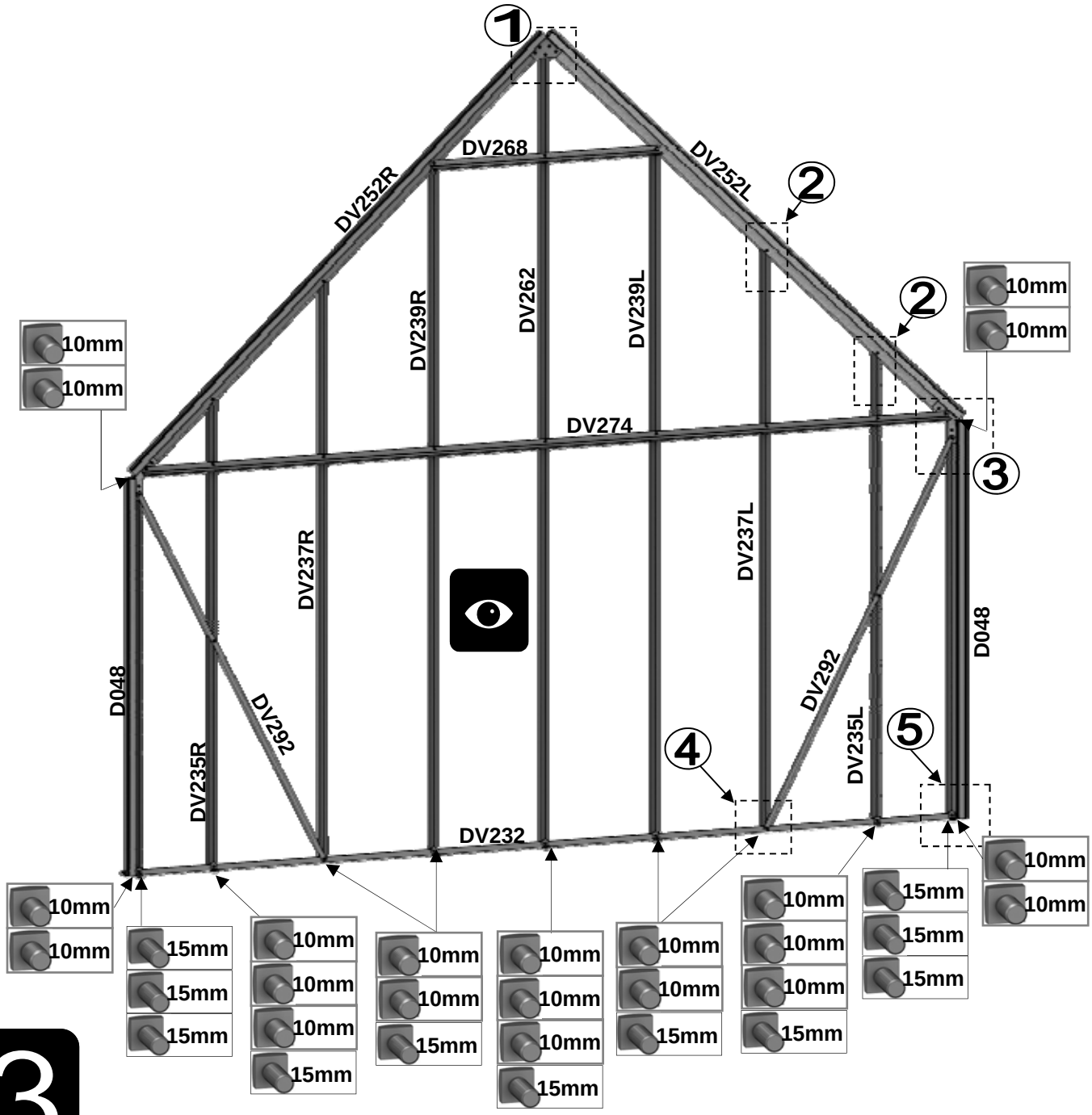

3

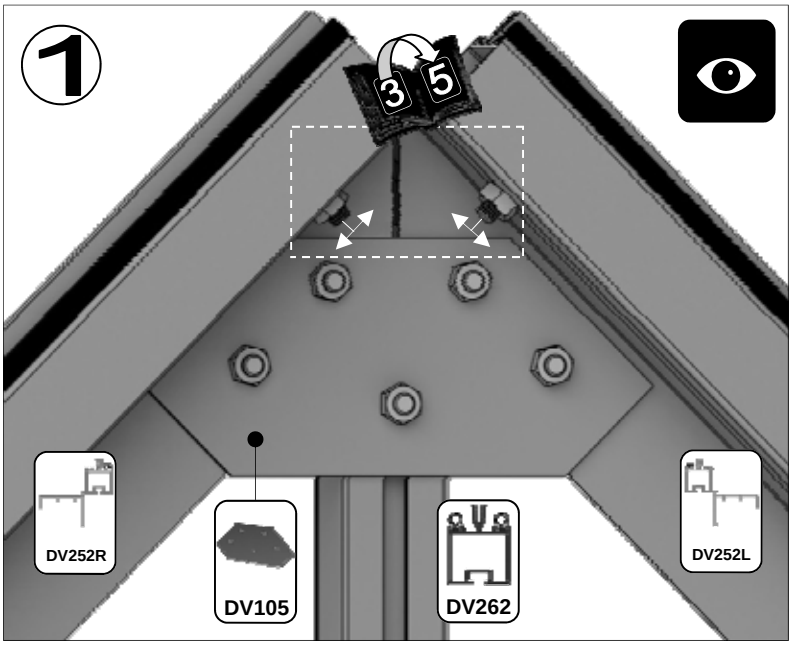
1
3
5
DV252R
DV105
DV262
DV252L

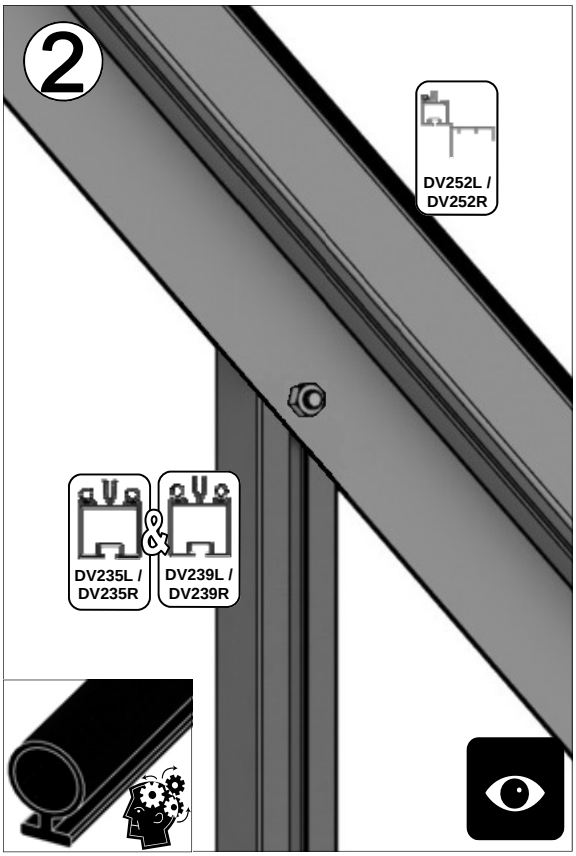
2
DV252L /
DV252R
DV235L /
DV235R
&
DV239L /
DV239R

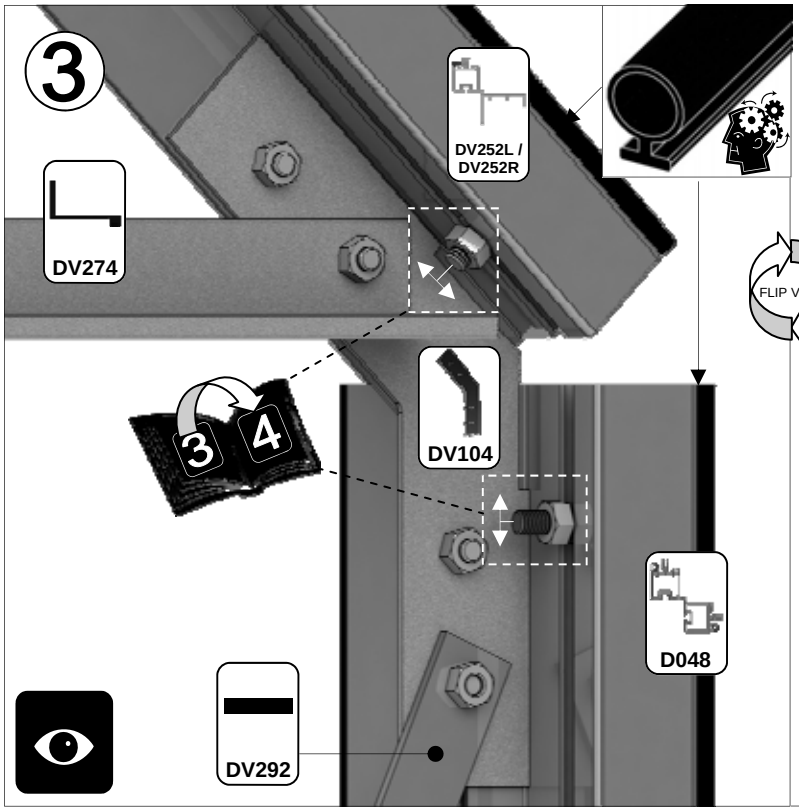
3
DV252L /
DV252R
DV274
3
4
DV104
D048
DV292

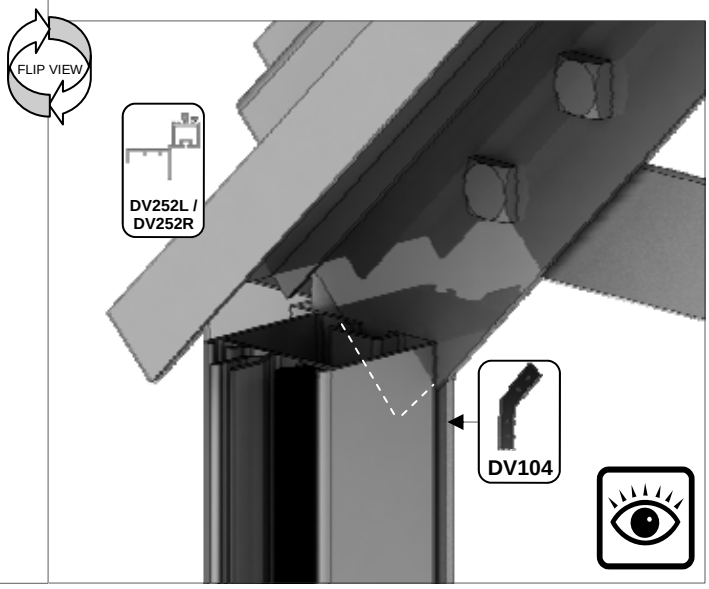
FLIP VIEW
DV252L /
DV252R
DV104

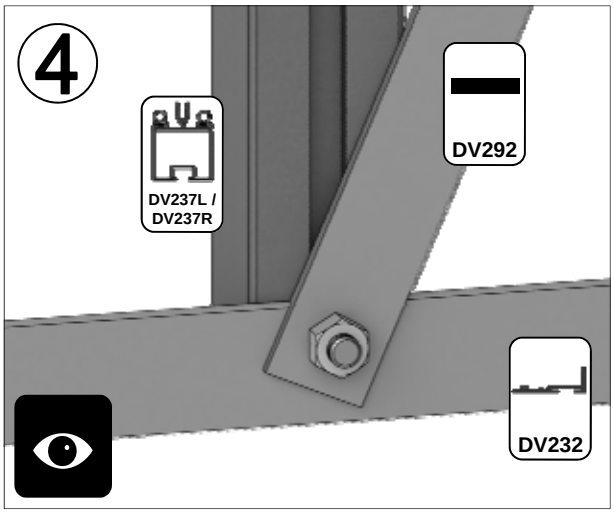
4
DV237L /
DV237R
DV292
DV232

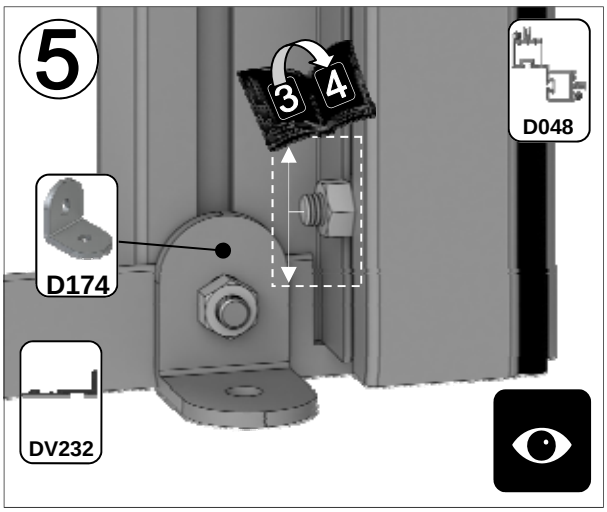
5
3
4
D048
D174
DV232

3

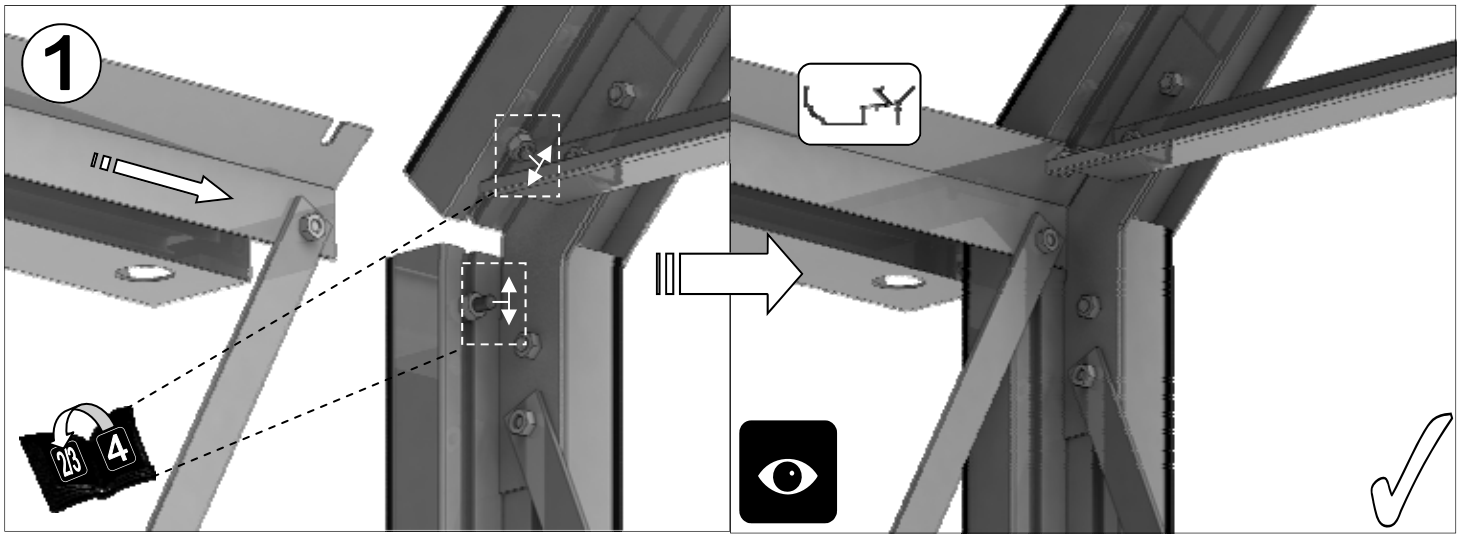
1
23
4

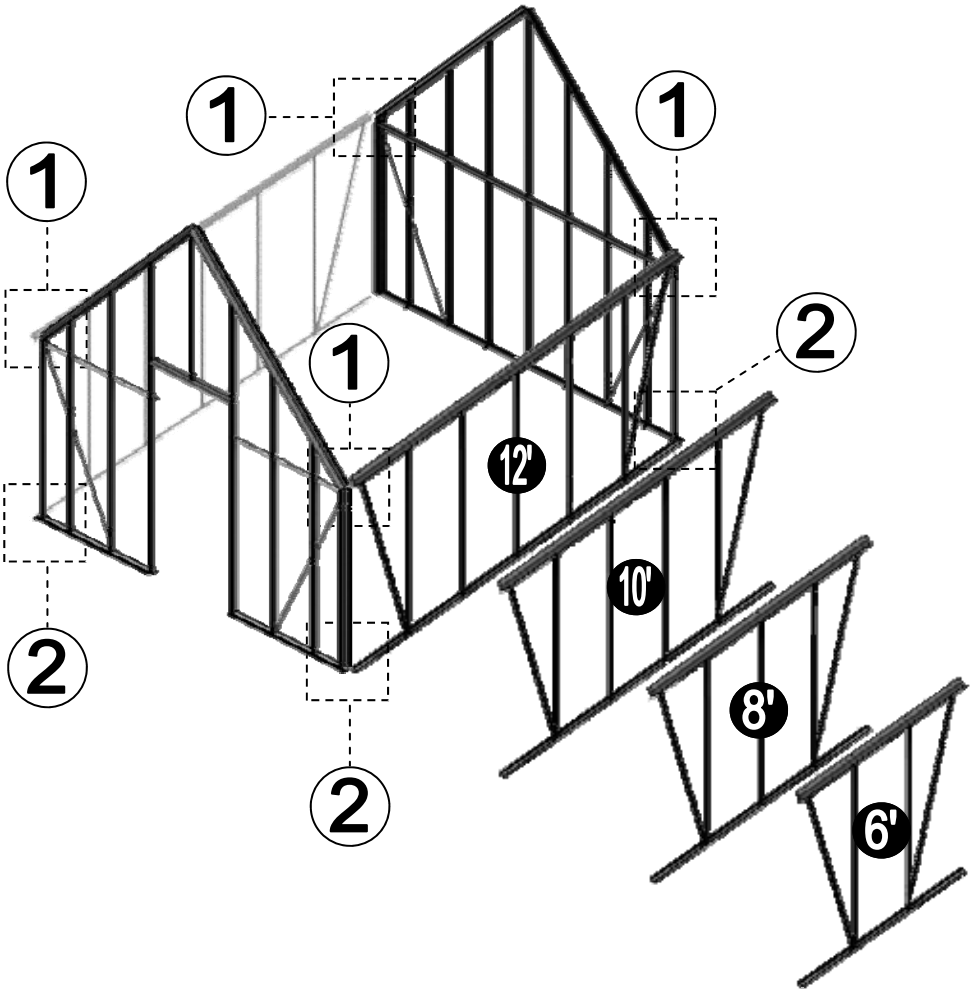
1
1
1
1
2
2
2
12'
10'
8'
6'

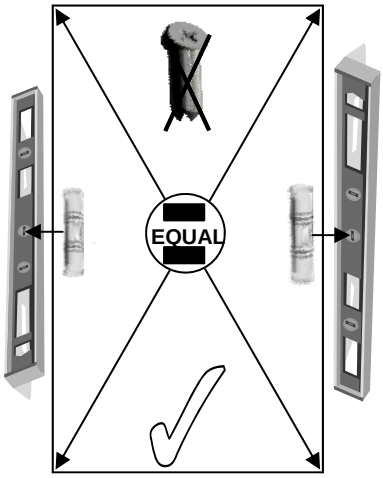
EQUAL

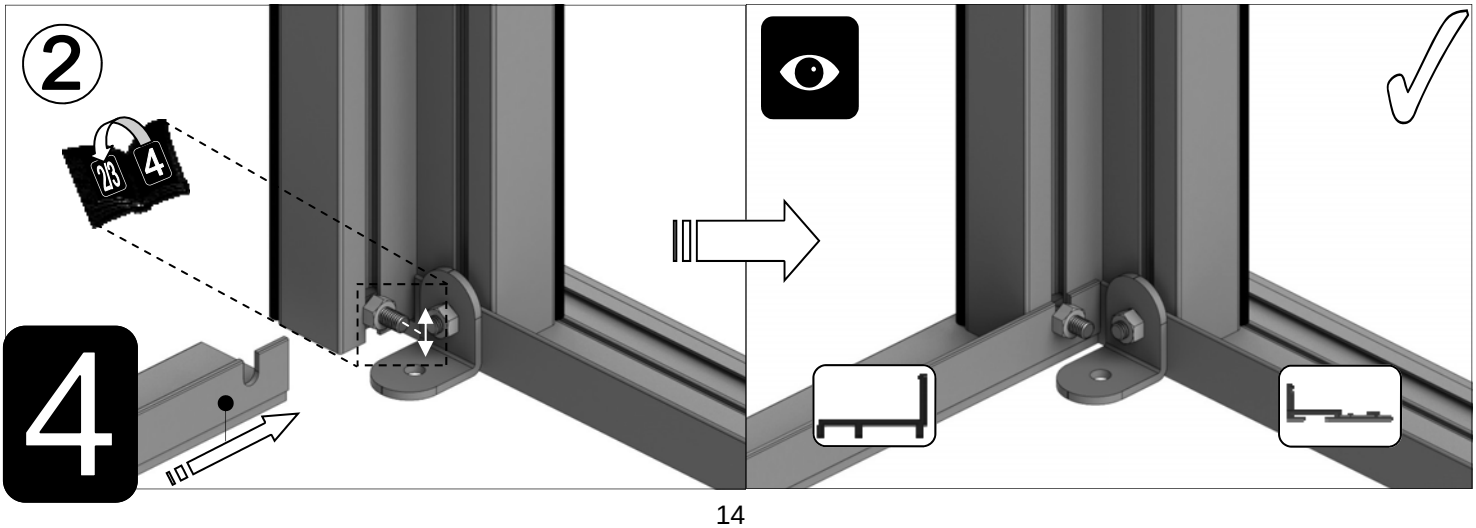
2
23
4
4

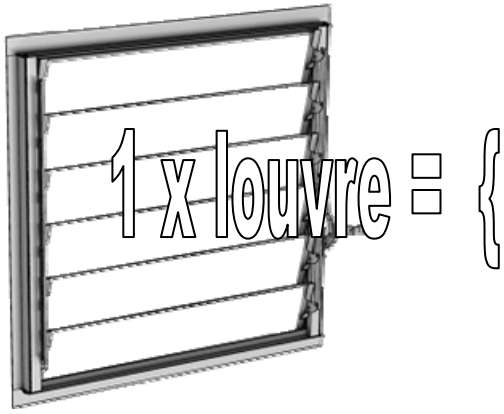

Part No		mm	Quantity
D168L		552	1
D168R (handle)		552	1
D165		612	2
D166		552	2
FS6013		12	4

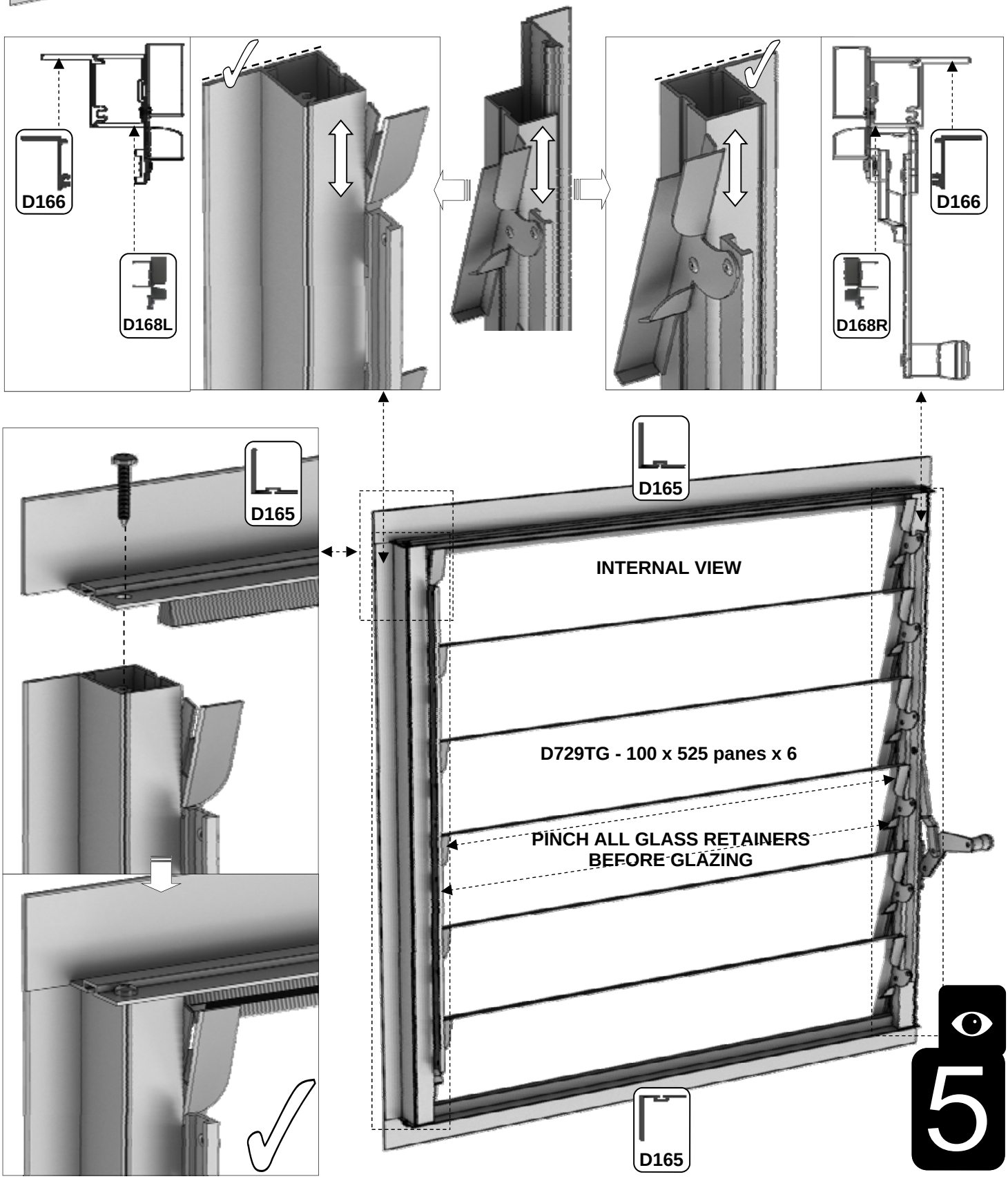

6’		
Part No	mm	Quantity
DV204	1897	1
DV255	2450	4
DV100	n/a	4
DV101	n/a	2
RUBBER	1000	20
SYBOLM6X11		8
SYBOLM6X22		16
SYNUTM6		32

8’		
Part No	mm	Quantity
DV201	2517	1
DV255	2450	6
DV100	n/a	6
DV101	n/a	3
RUBBER	1000	30
SYBOLM6X11		12
SYBOLM6X22		24
SYNUTM6		48

10’		
Part No	mm	Quantity
DV202	3137	1
DV255	2450	8
DV100	n/a	8
DV101	n/a	4
RUBBER	1000	40
SYBOLM6X11		16
SYBOLM6X22		32
SYNUTM6		64

12’		
Part No	mm	Quantity
DV203	3757	1
DV255	2450	10
DV100	n/a	10
DV101	n/a	5
RUBBER	1000	50
SYBOLM6X11		20
SYBOLM6X22		40
SYNUTM6		80

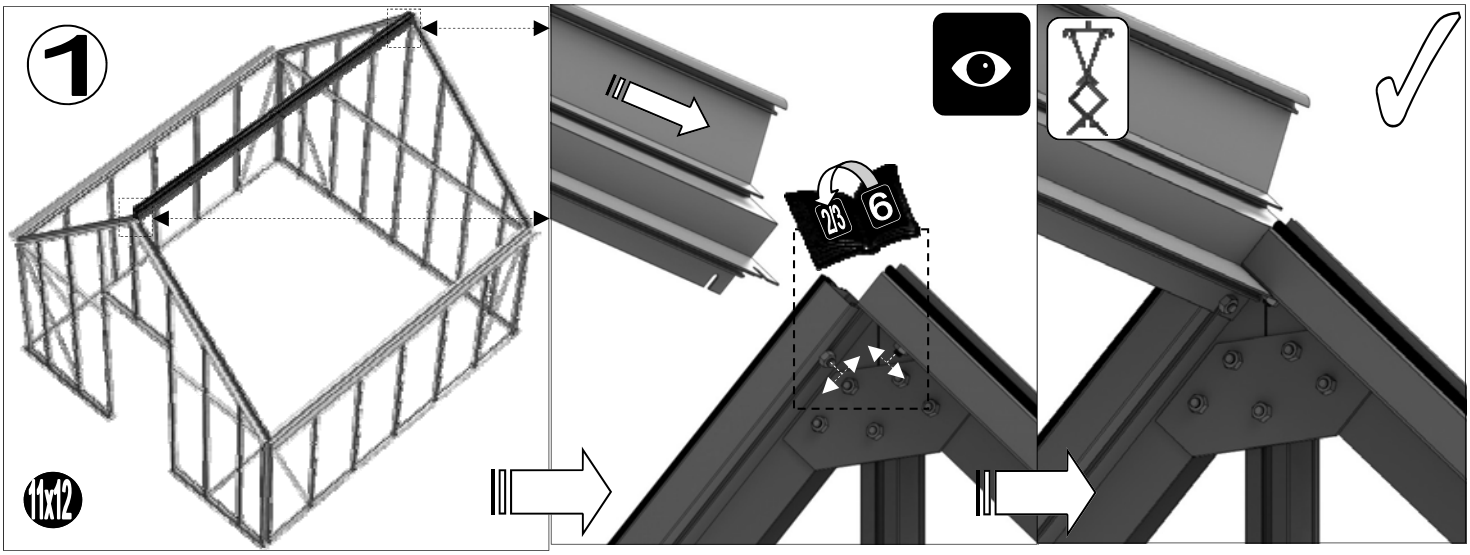

2

- End finials need to be pinched onto the ridge using ‘DV282’ grub screws.
- Depending on your ridge length a half cresting may need to be cut. Some spacer bar may also be required ‘DV281’ cut into two equal sections.
- Each finial and cresting piece needs to be siliconed ‘D119’ into place.

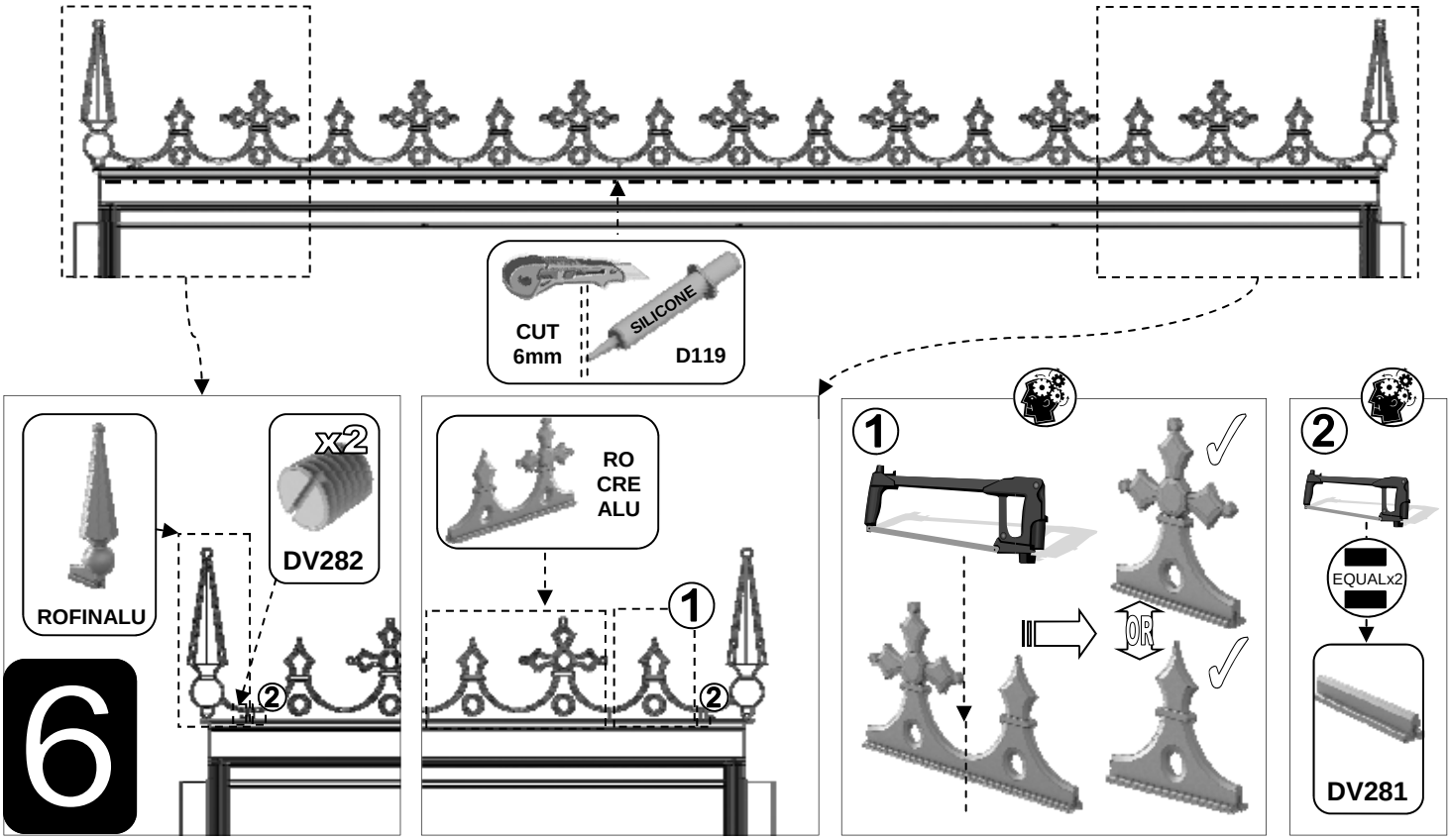

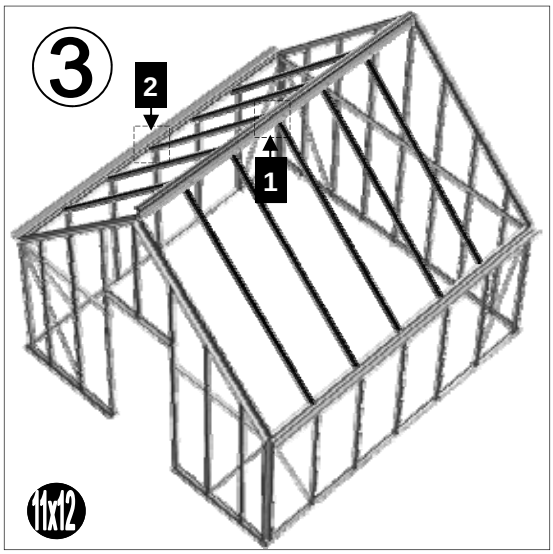
3
2
1
11x12

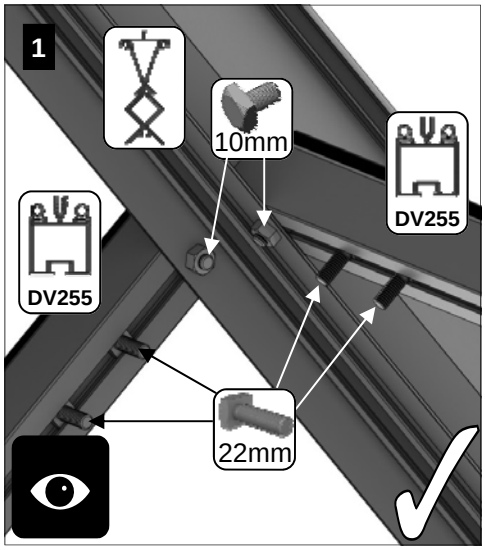
1
10mm
DV255
DV255
22mm

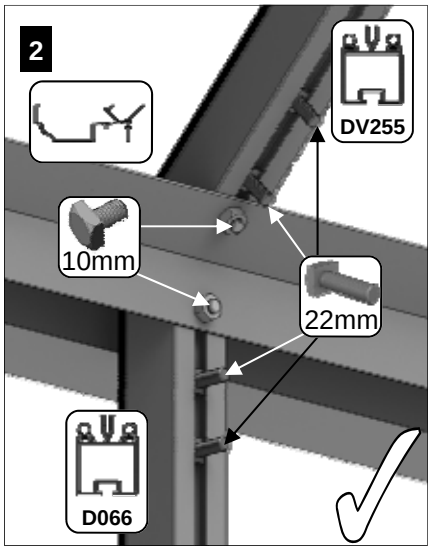
2
DV255
10mm
22mm
D066

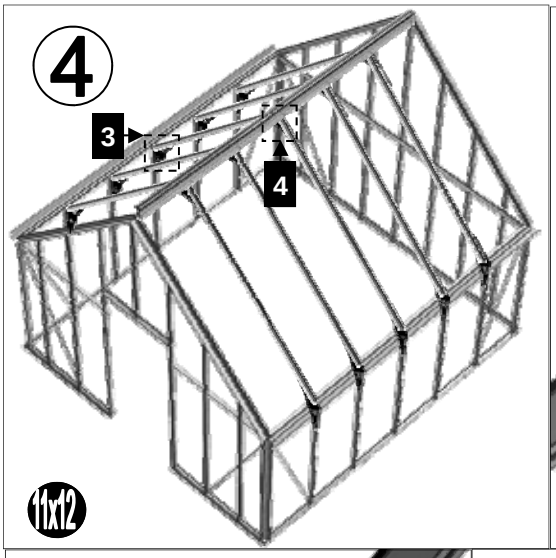
4
3
4
11x12

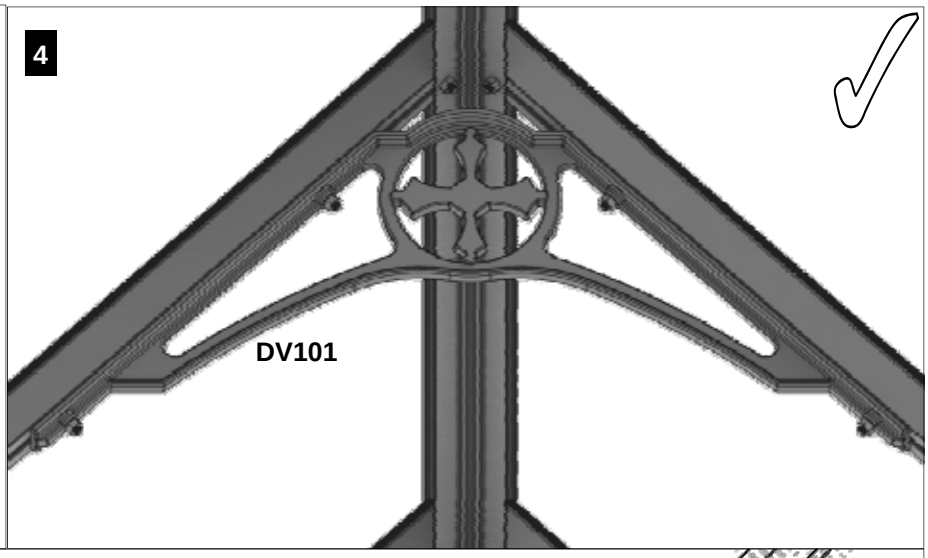
4
DV101

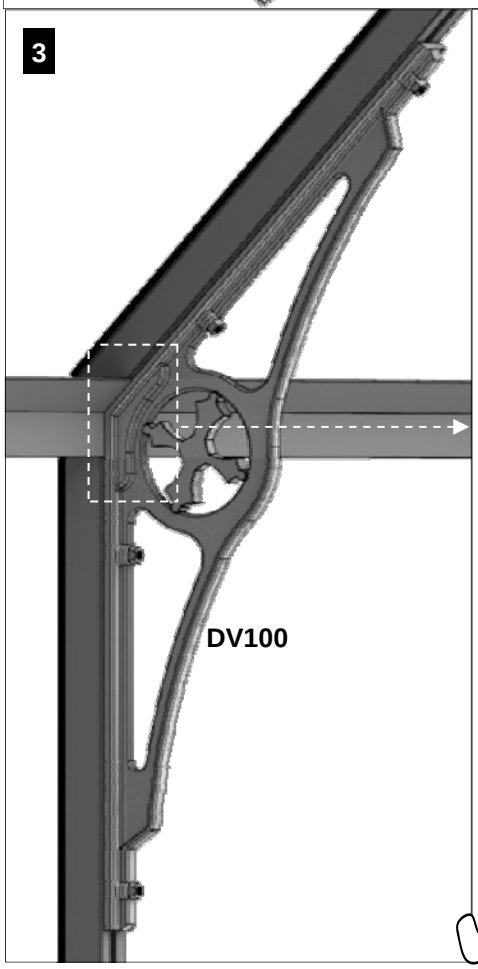
3
DV100

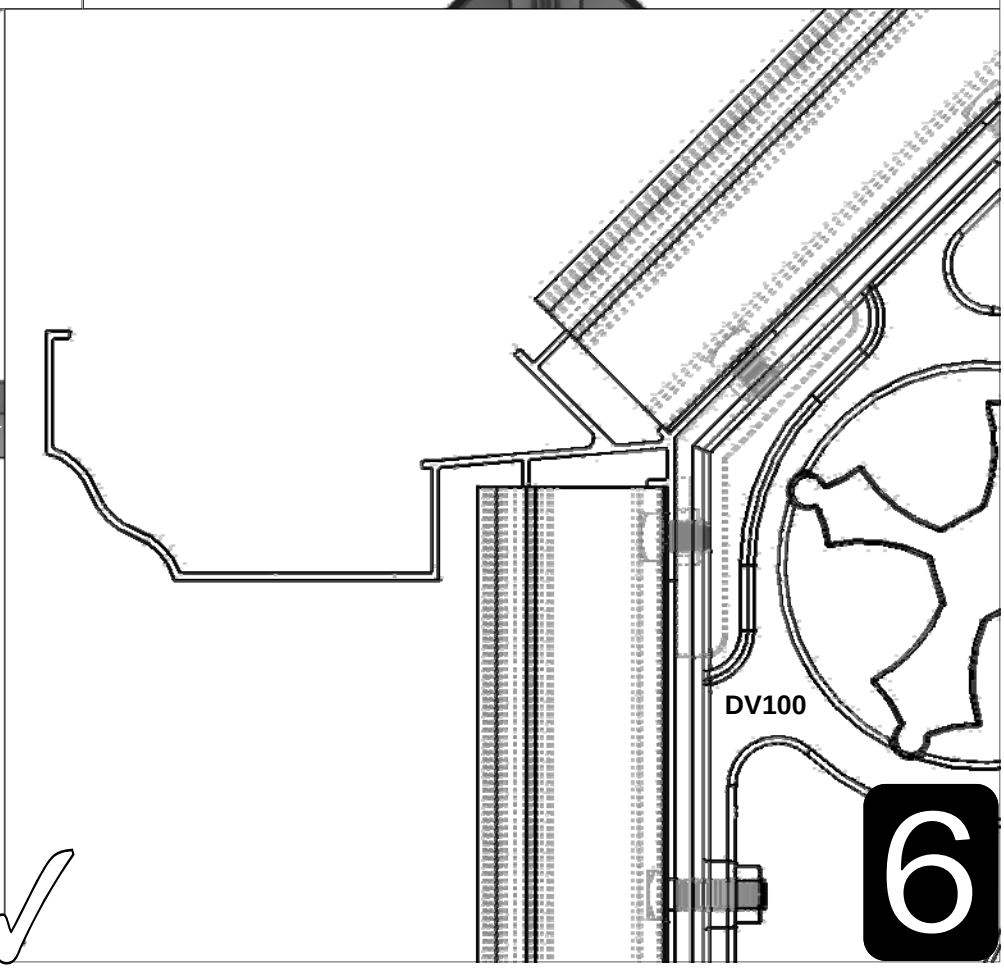
DV100
6

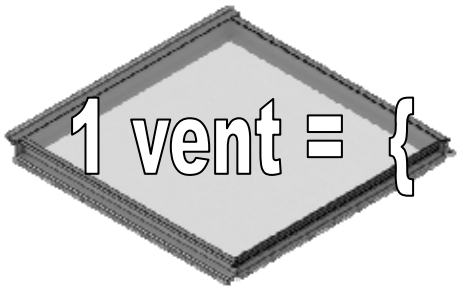

Part No		mm	Quantity
D866		639	1
D863L		613	1
D863R		613	1
D862		593	1

Part No		mm	Quantity
D220 PLUS SCREW		N/A	2
D205		N/A	2
SY-BOLM6X11		10	4
SYNUTM6		M6	4
8 X 12 S/T FS6017		10	2
8 x 19 S/T FS6018		19	2

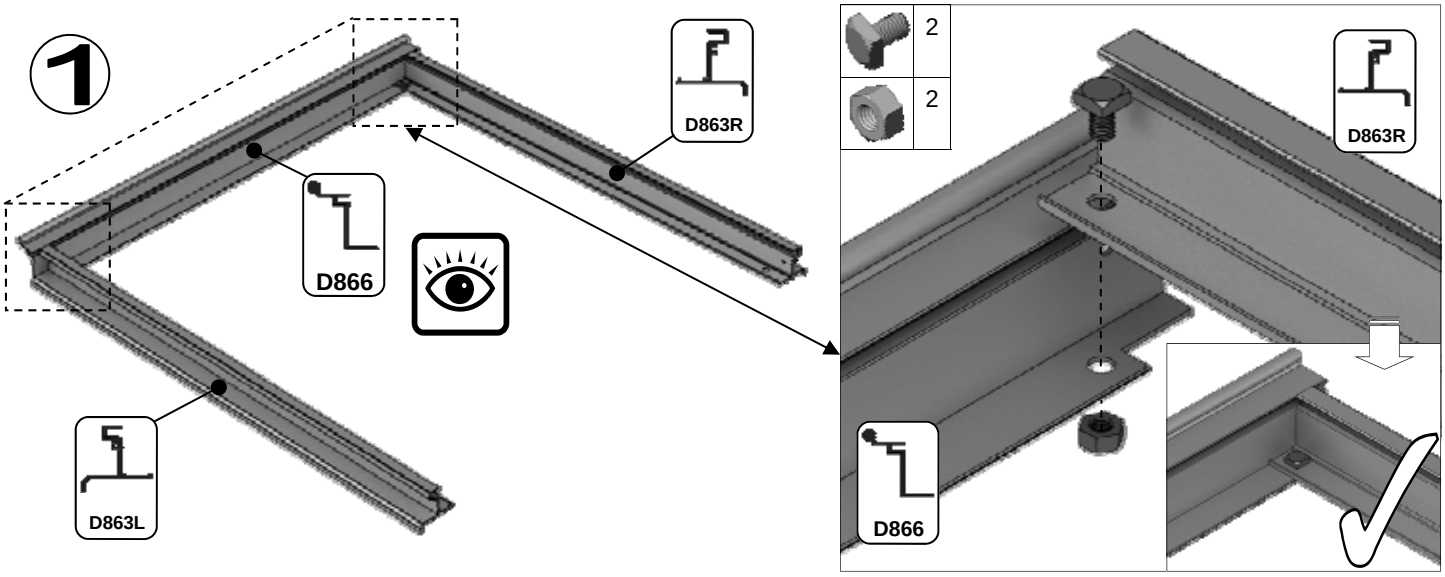

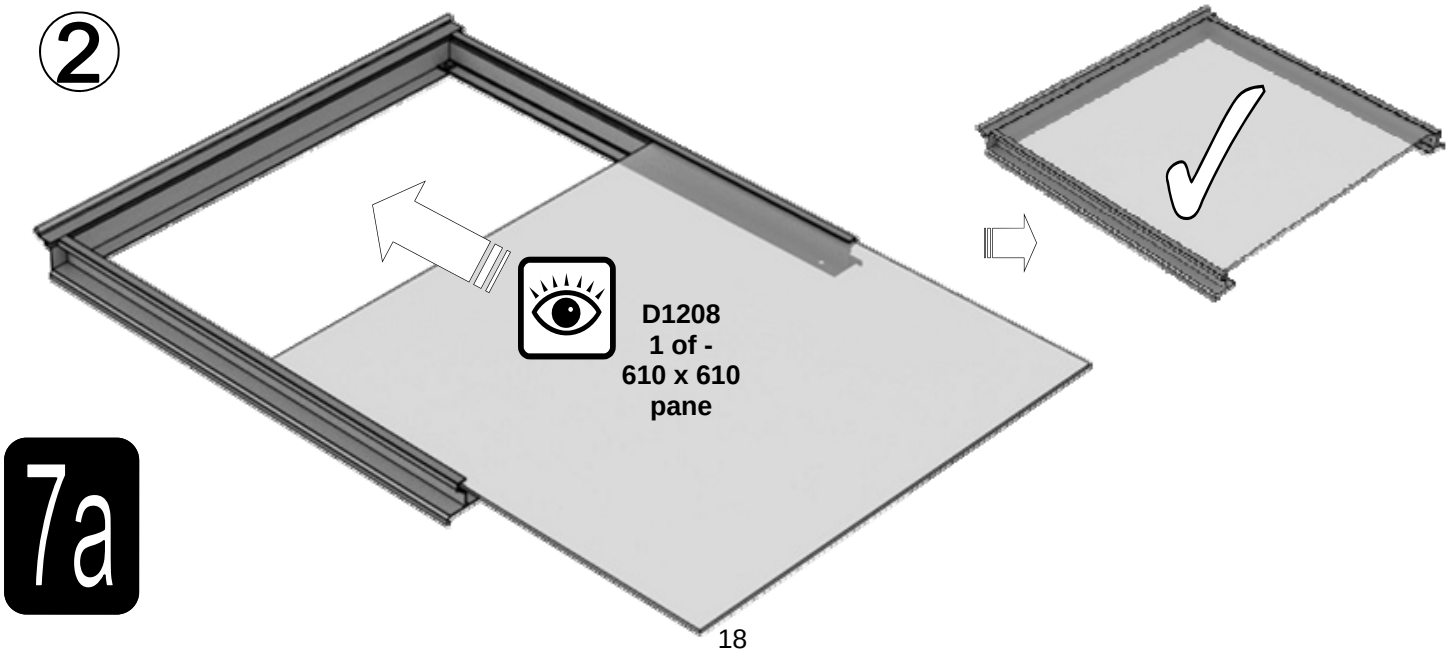

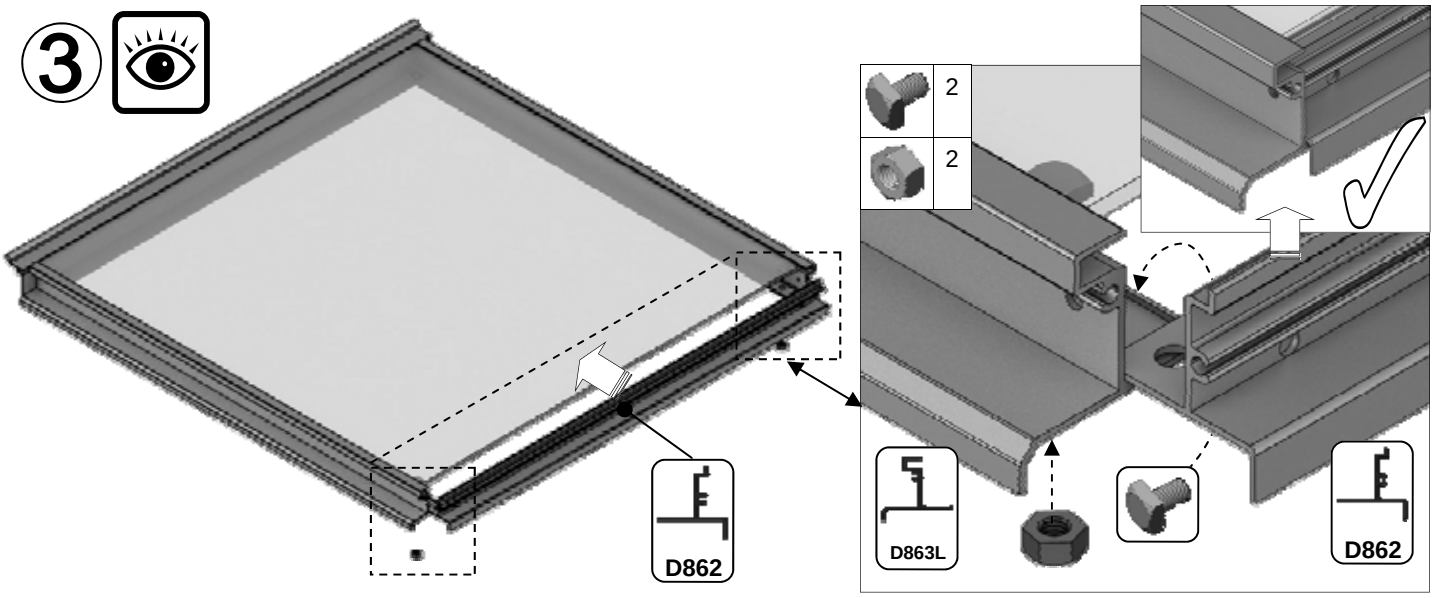
3
2
2
D862
D863L
D862

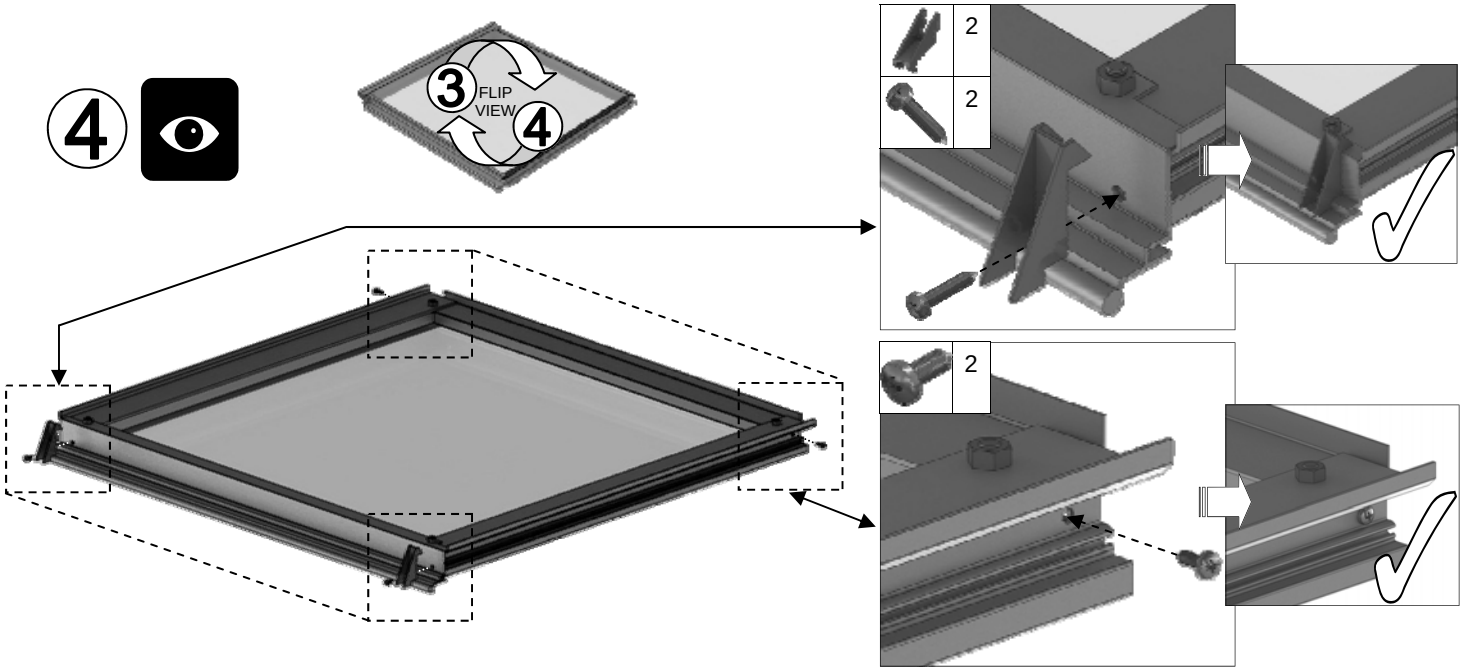
4
3
FLIP
VIEW
4
2
2
2

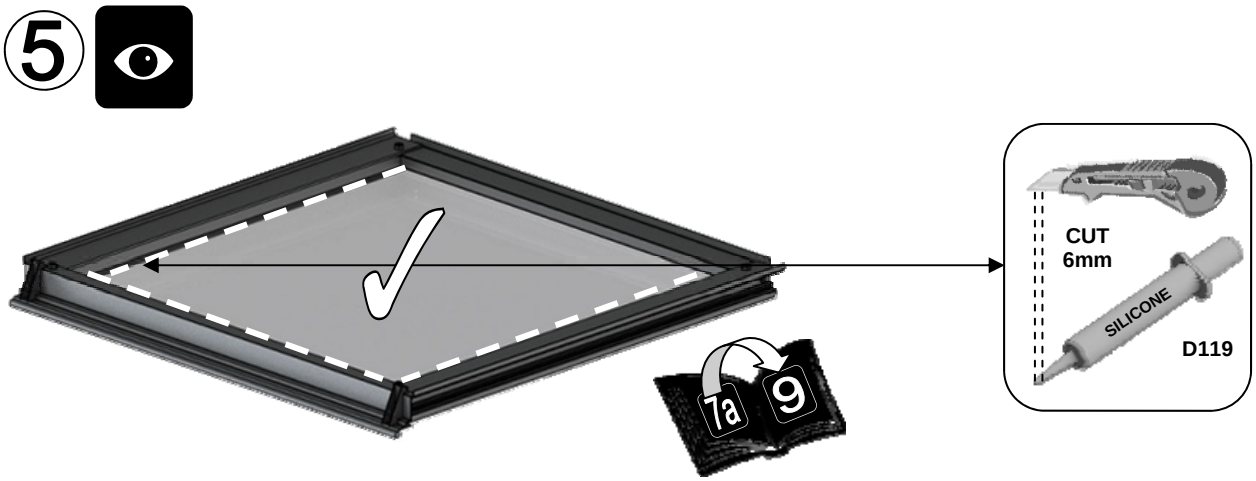
5
CUT
6mm
SILICONE
D119
7a
9


7a

1 vent slam bar = {

Part No		mm	Quantity
SY-BOLM6X11		10	2
SY-BOLM6X15		15	2
SYBOLM6 X11CROP		10	2
SYNUTM6		N/A	4

Part No		mm	Quantity
D079 PLUS FLUFF		590	1
D114		N/A	2

6

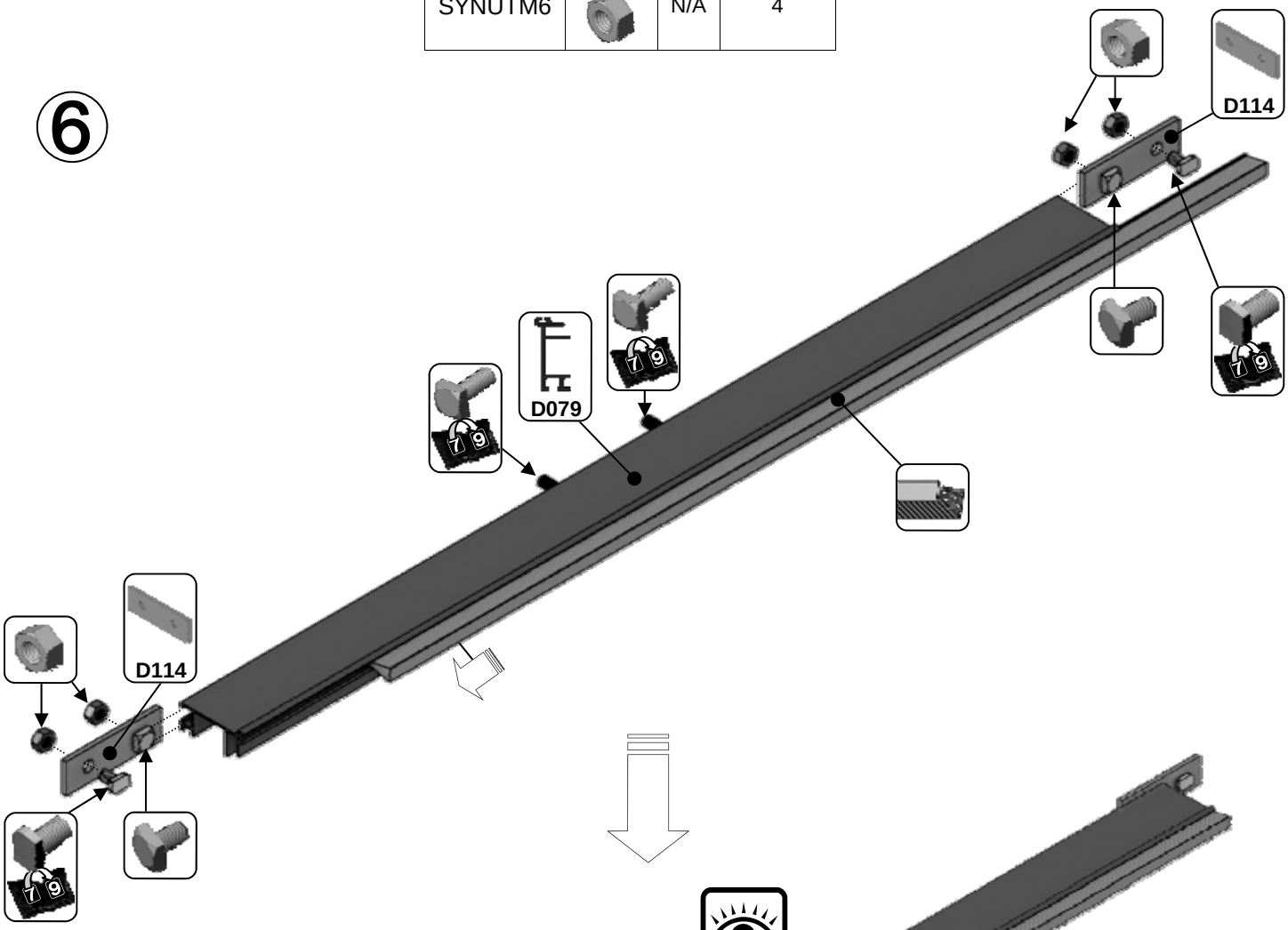

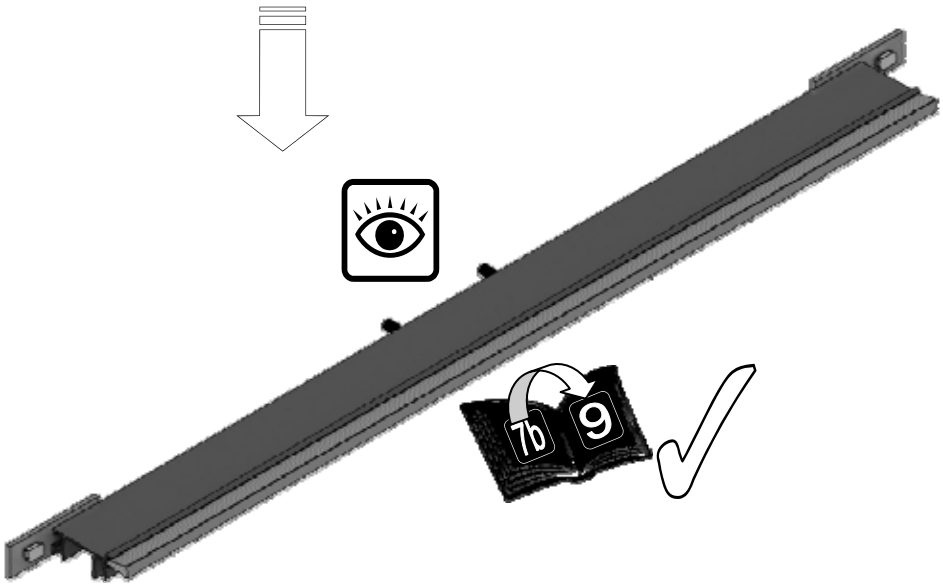

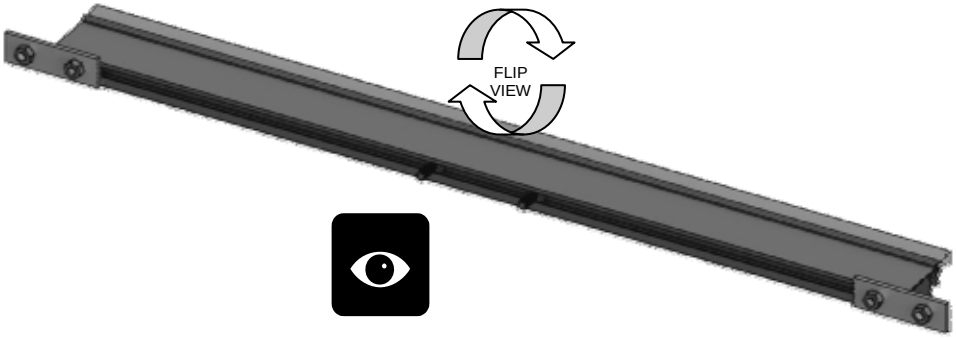

7b

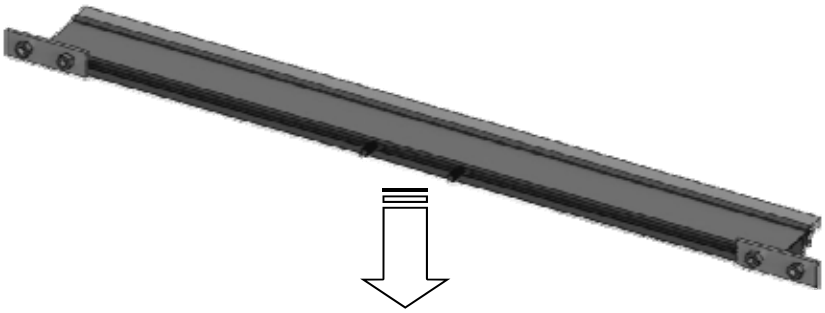

7b

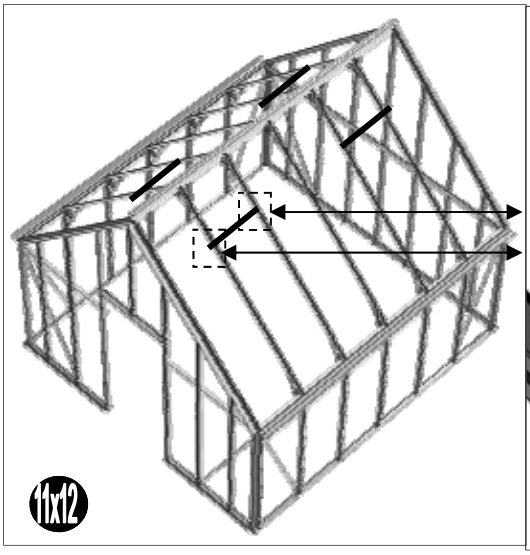

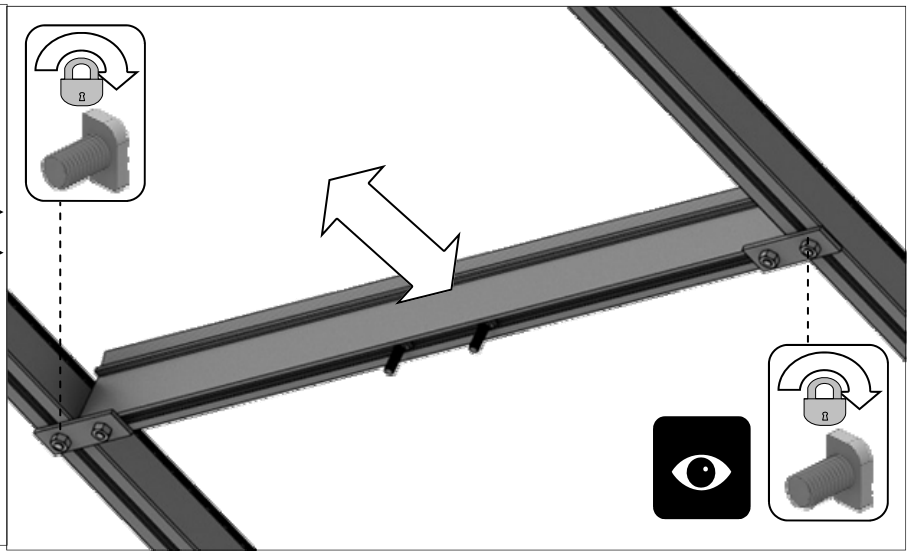

GLAZING (plans pto):

Glass and aluminium can potentially cause injury. Please ensure you wear protective goggles, gloves, headgear and suitable footwear when assembling and glazing the building.

Please remember that glass is fragile and should be handled with extreme care. Always clear up and dispose of any breakages immediately.

Layout the plastic bar cappings e.g. D812 and covers e.g. D825 around the building like a sundial checking that all is present and correct, see right and pto. You can also place the roof cappings in the gutters so they are closer to hand.

The glass in the sides has to bevel on the black / white separator strip (see right) which is on top of the 305mm high glass base panels. This bevelling action allows the glass to tuck underneath the gutter and roof corner canopy. Use the capping e.g. D812 and the self tapping screws to then hold the glass in place. The covers then enclose the screw heads giving a neat finish e.g. D825.

<u>IMPORTANT</u>: On the roof sections please make sure that you place a screw around 25mm / 1” from the bottom of each capping strip (create a hole in the plastic if required) and that the screws are nice and tight to avoid any glass slippage.

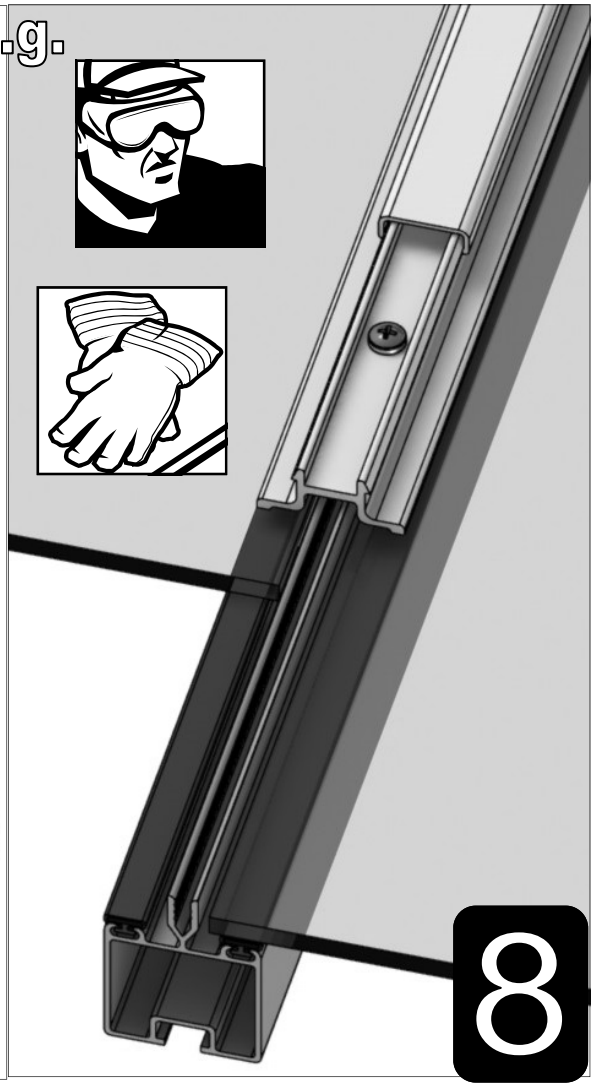

PART No	Section	Size (mm)
D870		601
DV479		1384
DV635L/R		2021
DV637L/R		2489
DV639L/R		2960
DV655		1880
DV662		3395
DV664		1373
D812		1660
D813		1675
D834		1660
D871		601
DV652		1871
D825		1660
D826		1677
DV480		1384
DV636L/R		2021
DV638L/R		2489
DV640L/R		2960
DV658		2481
DV668		3395
DV670		1373

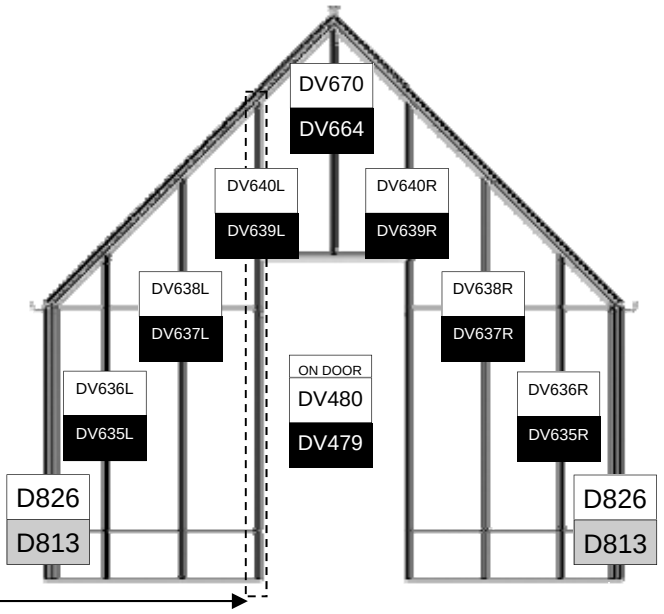

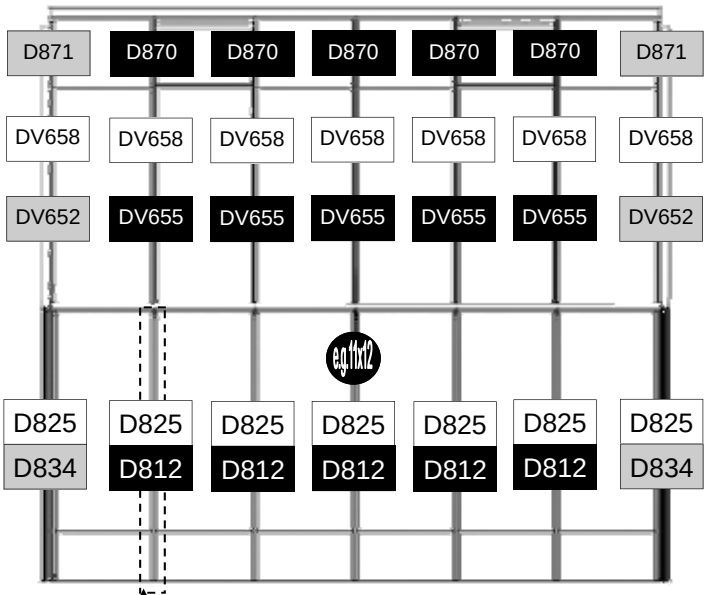

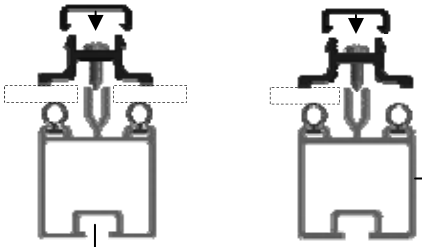

e.g.

e.g.

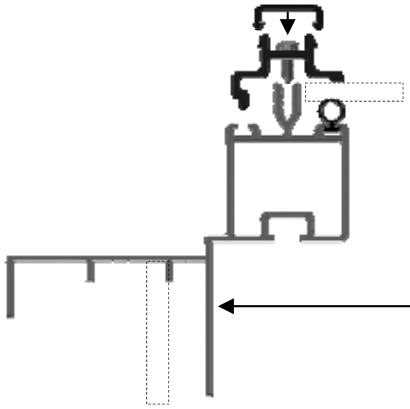

e.g.

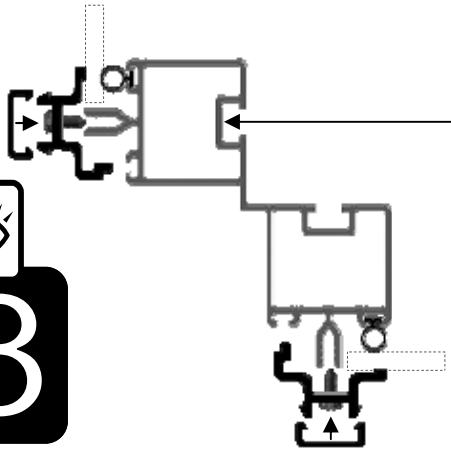

e.g.

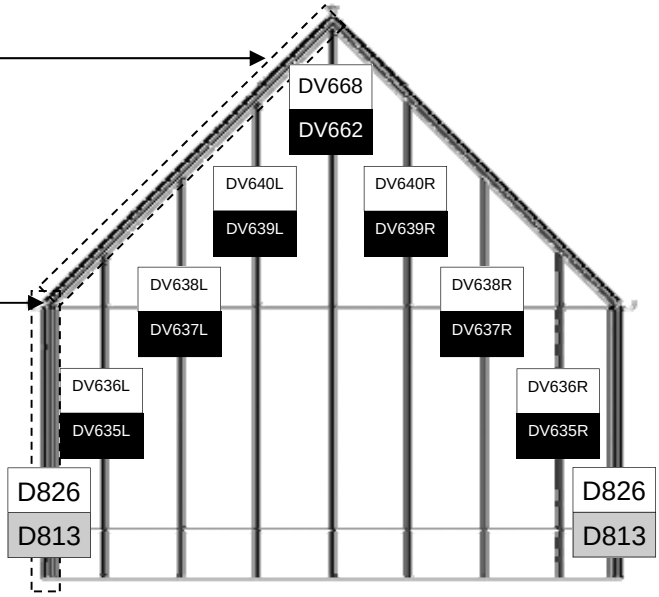

8

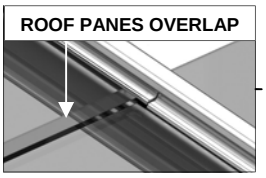

VICTORIAN 11 TOUGHENED GLASS

e.g. 11x12

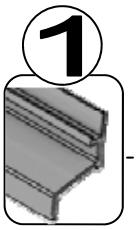

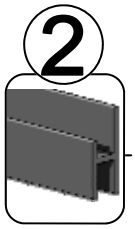

e.g.

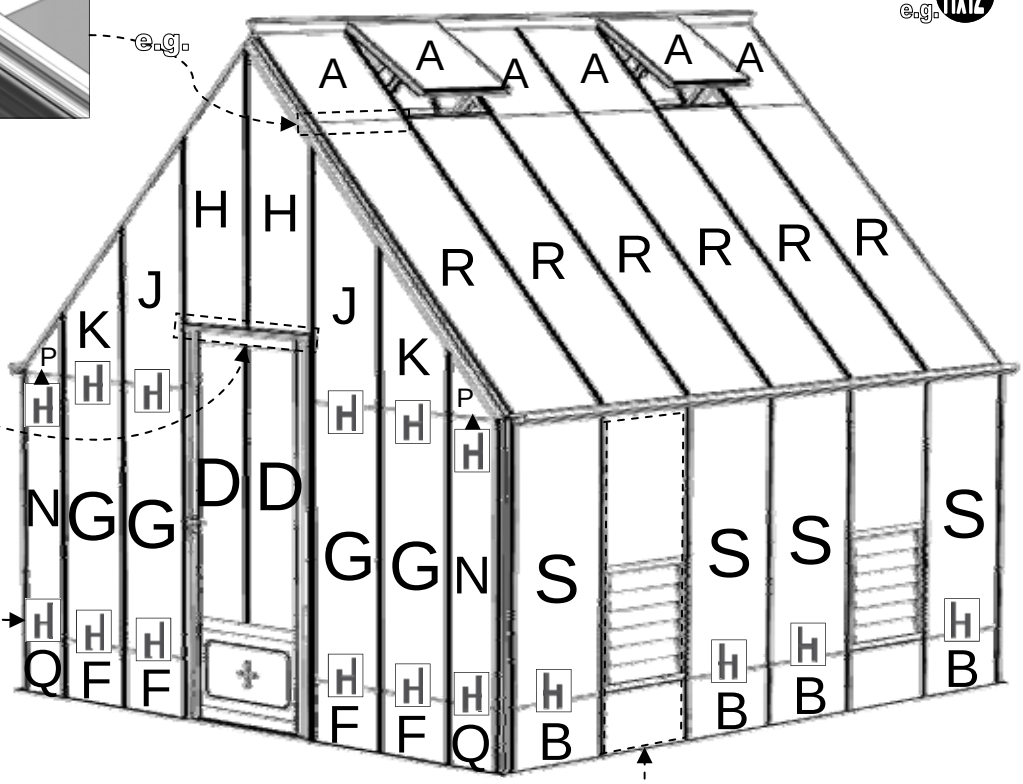

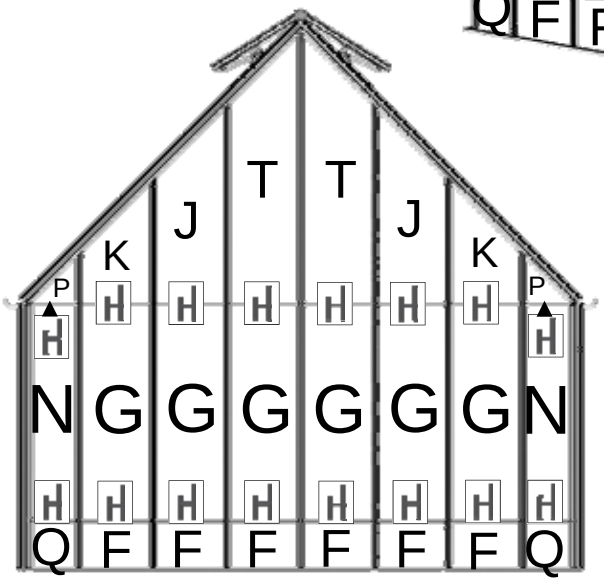

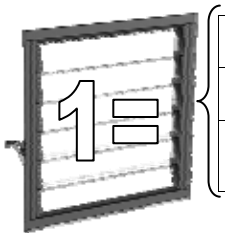

D906	M	610 X 762	1
D729	L	525 X 100	6
D101 / ROSEPS	H	610 long	1

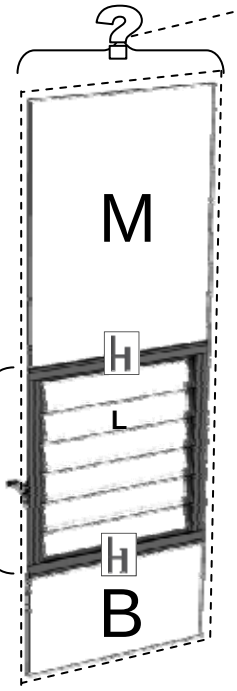

PART No		Size (mm)	6’	8’	10’	12’
D1206	S	610 X 1374	4	6	8	10
610 X 1890	R	610 X 1890	6	8	10	12
D1208	A	610 X 610	6	8	10	12
D1254	B	610 X 305	6	8	10	12
D904	N	305 X 1374	4			
D905	Q	305 X 305	4			
D770	F	457 X 305	10			
D771	G	457 X 1374	10			
DV700	D	357 X 1384	2			
DV507	P	ANGLE	4			
DV713	K	ANGLE	4			
DV714	J	ANGLE	4			
DV716	T	ANGLE	2			
DV717	H	ANGLE	2			
D223/B		Cut to 904mm	1			
D101 / ROSEPS	H	610 long (inc cuts to 457&305mm)	32	34	36	38

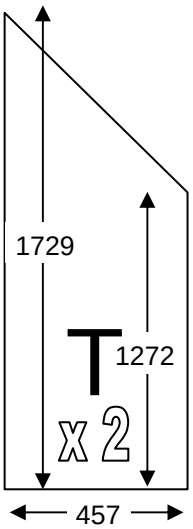

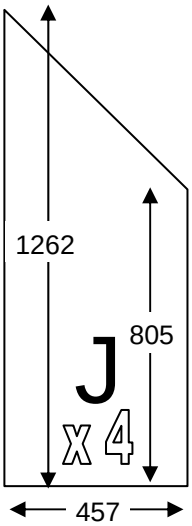

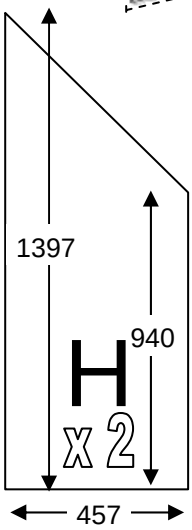

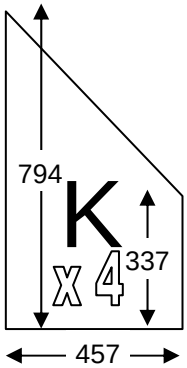

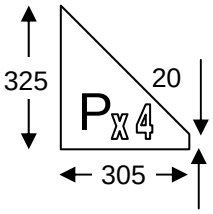

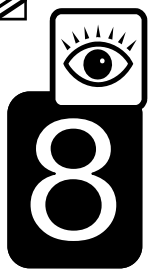

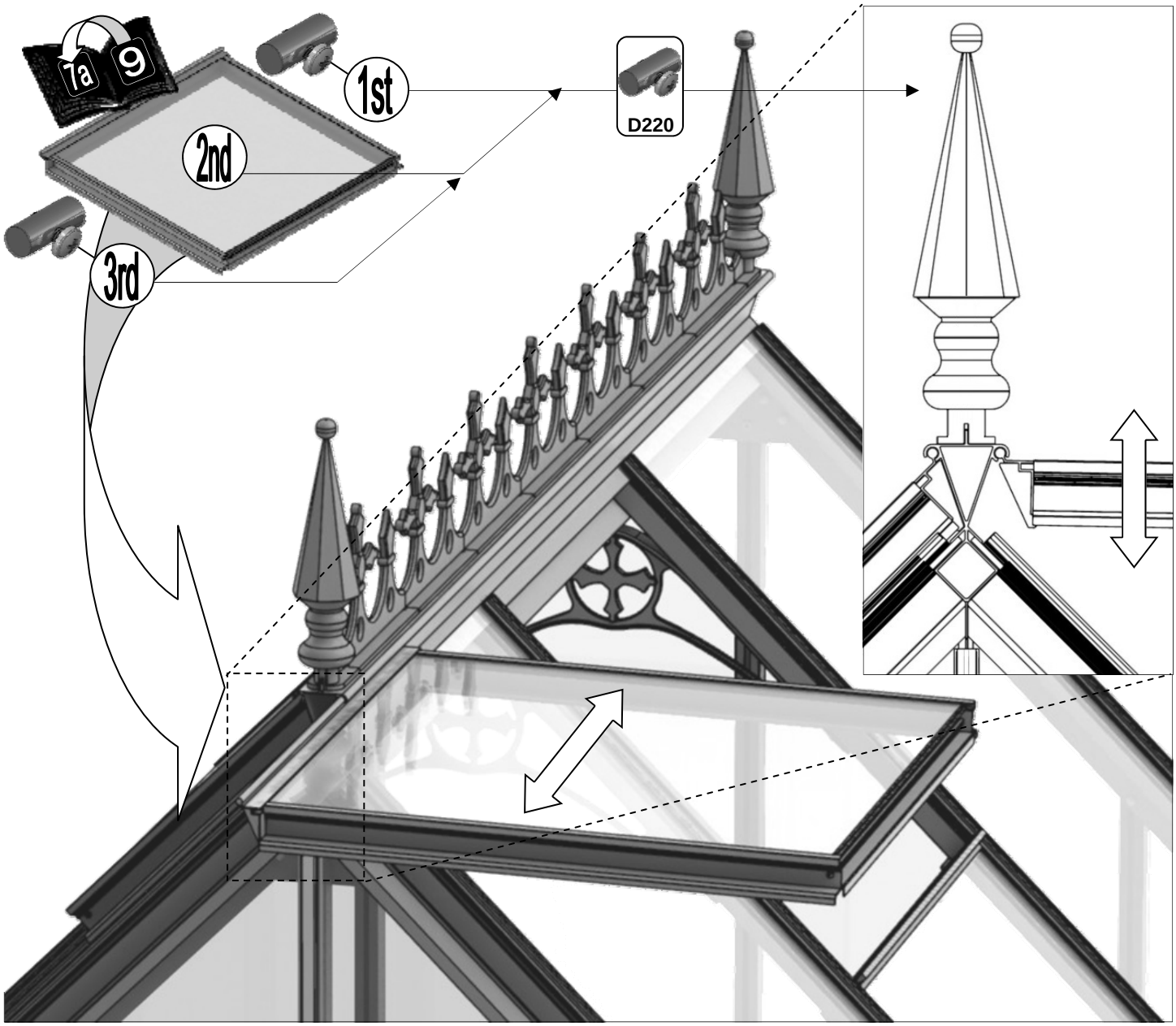
7a
9
1st
2nd
3rd
D220

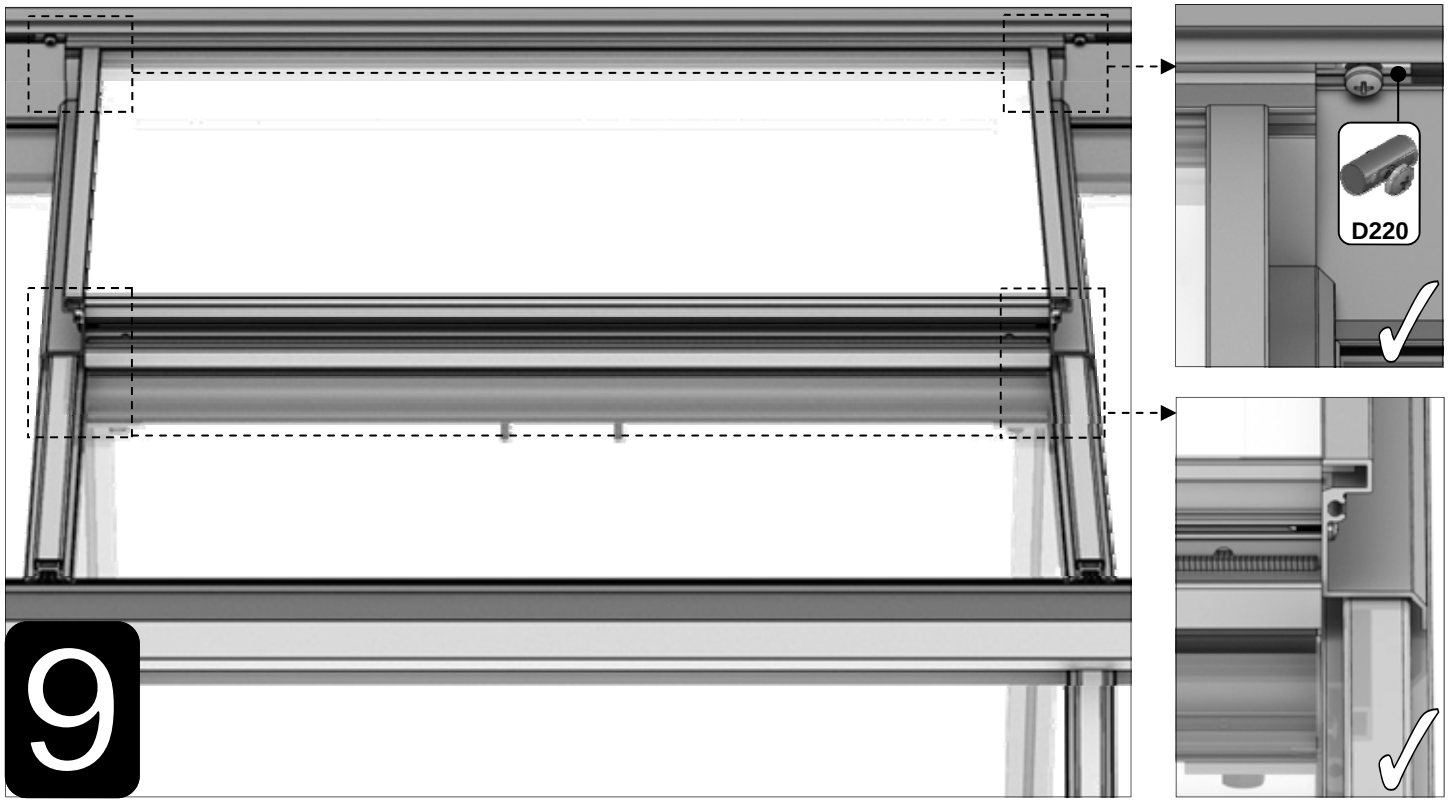
9
D220

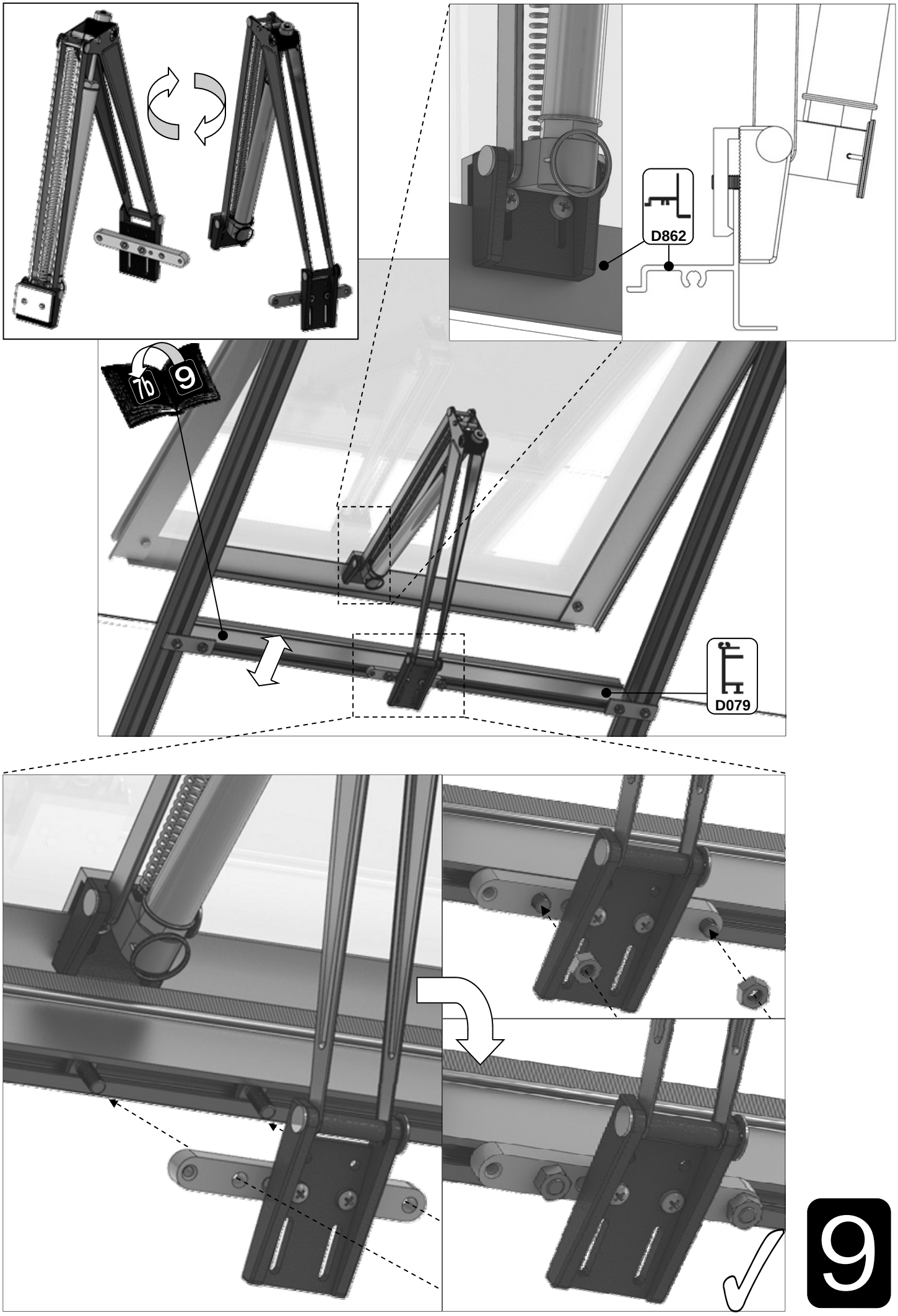
D862
7b
9
D079
9

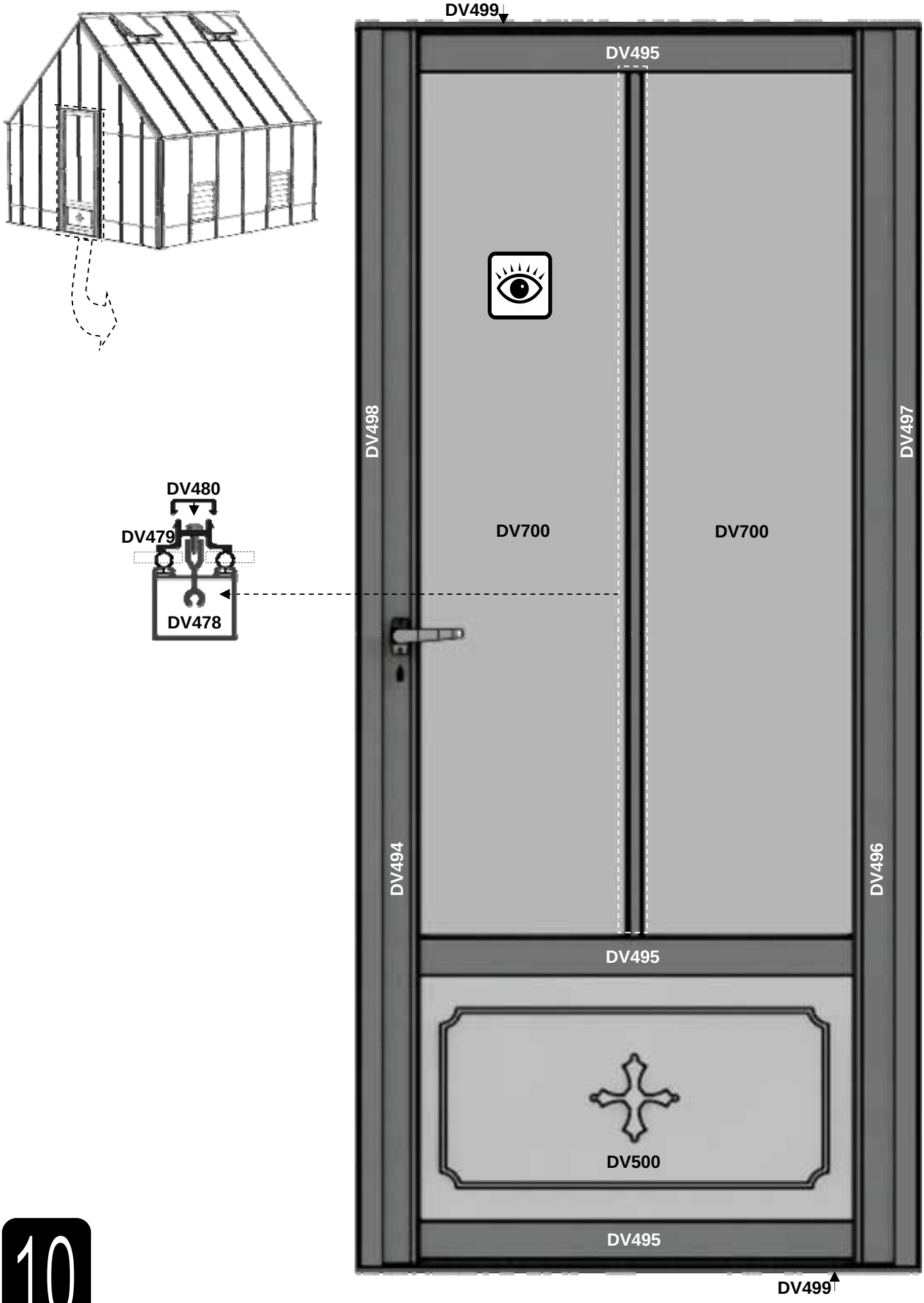
DV499
DV495
DV498
DV497
DV480
DV479
DV700
DV700
DV478
DV494
DV496
DV495
DV500
DV495
DV499

10

Part No		Quantity
D522		10
SYBOLM6 X11CROP		20
SYNUTM6		20

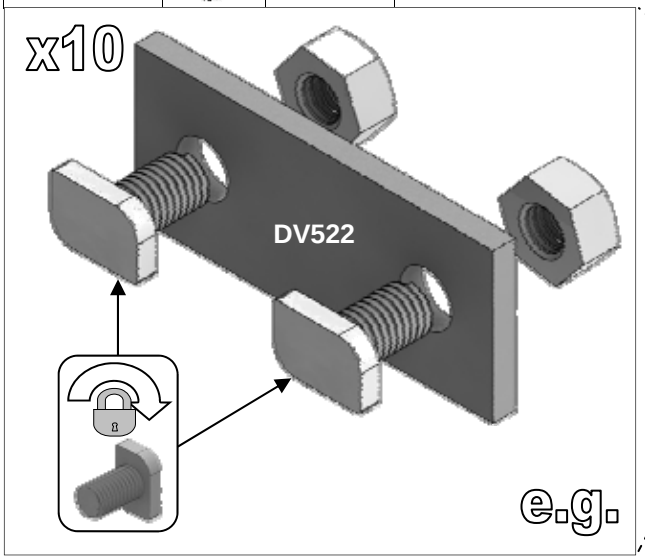

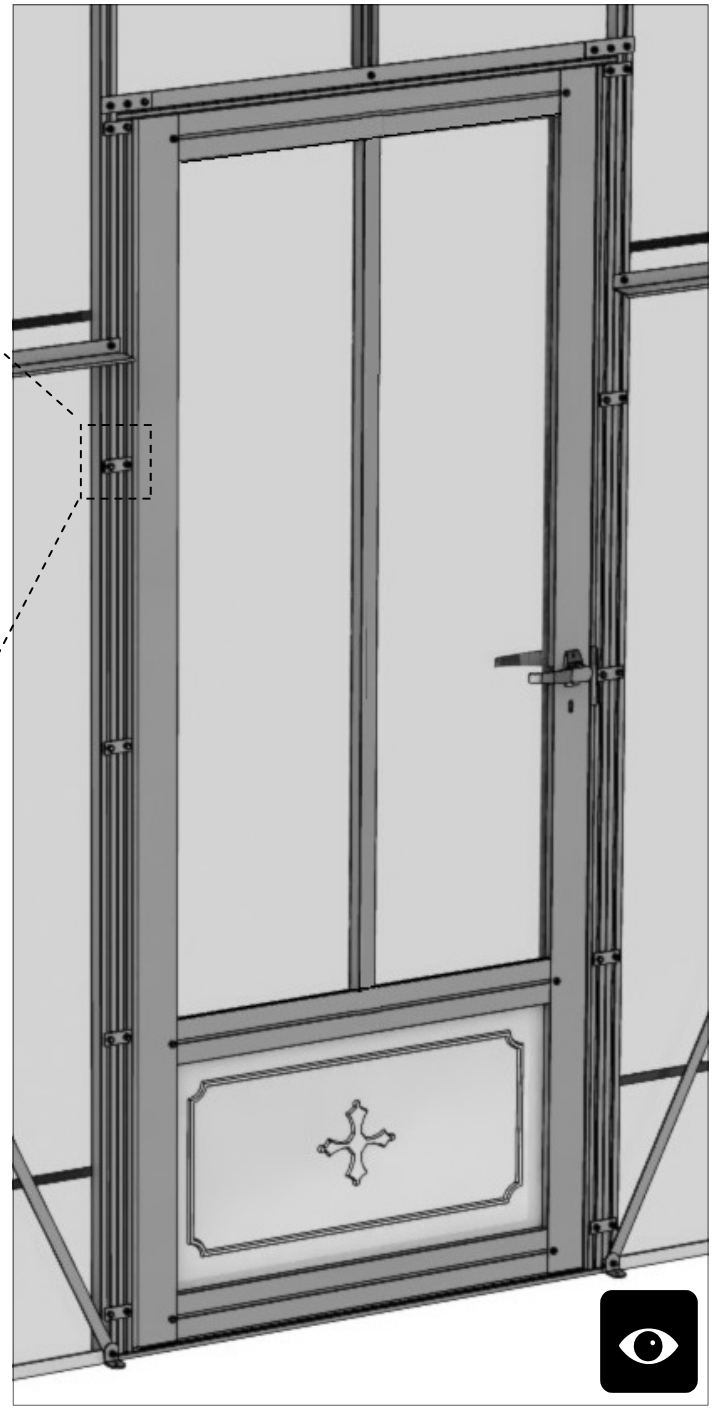

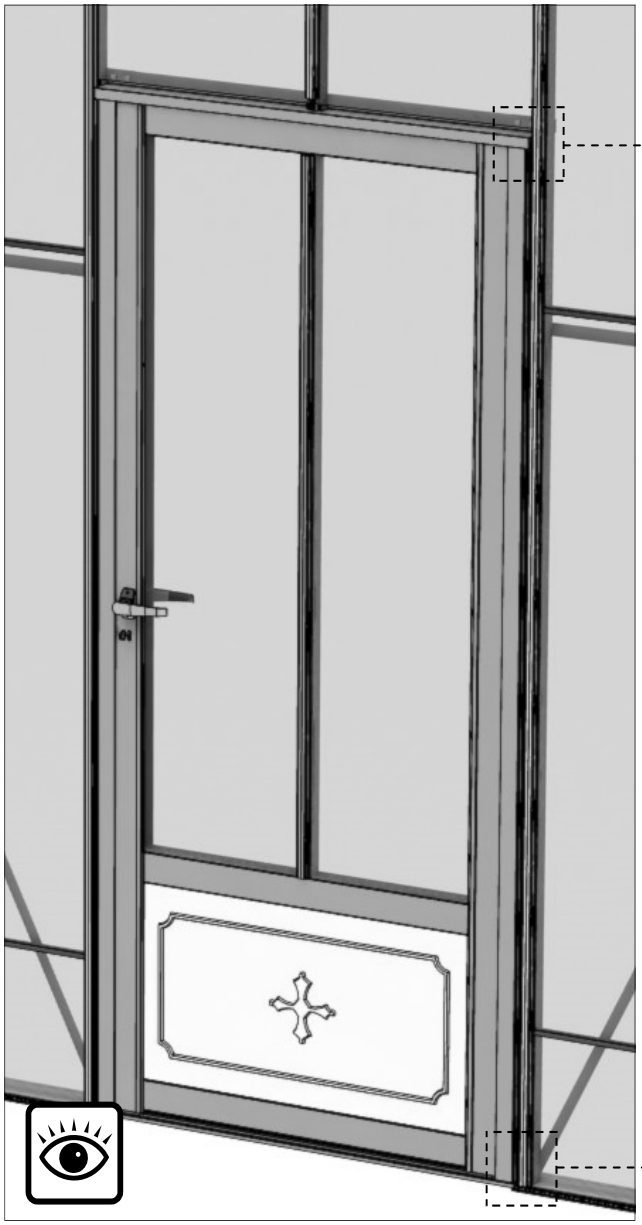

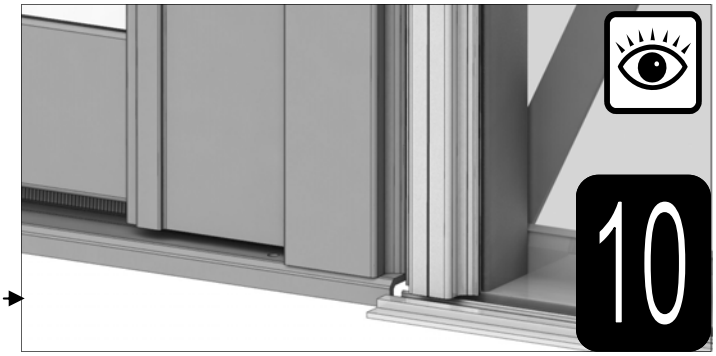

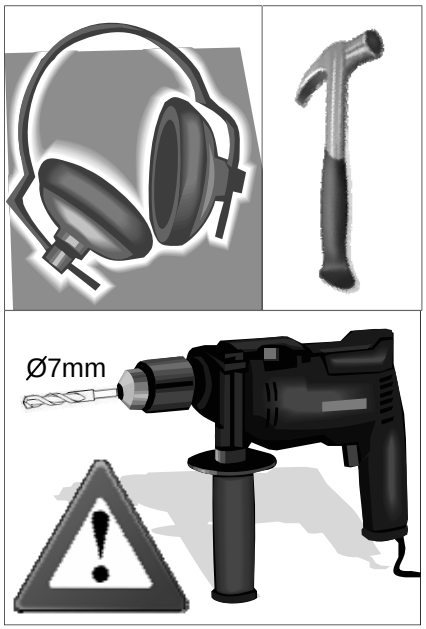

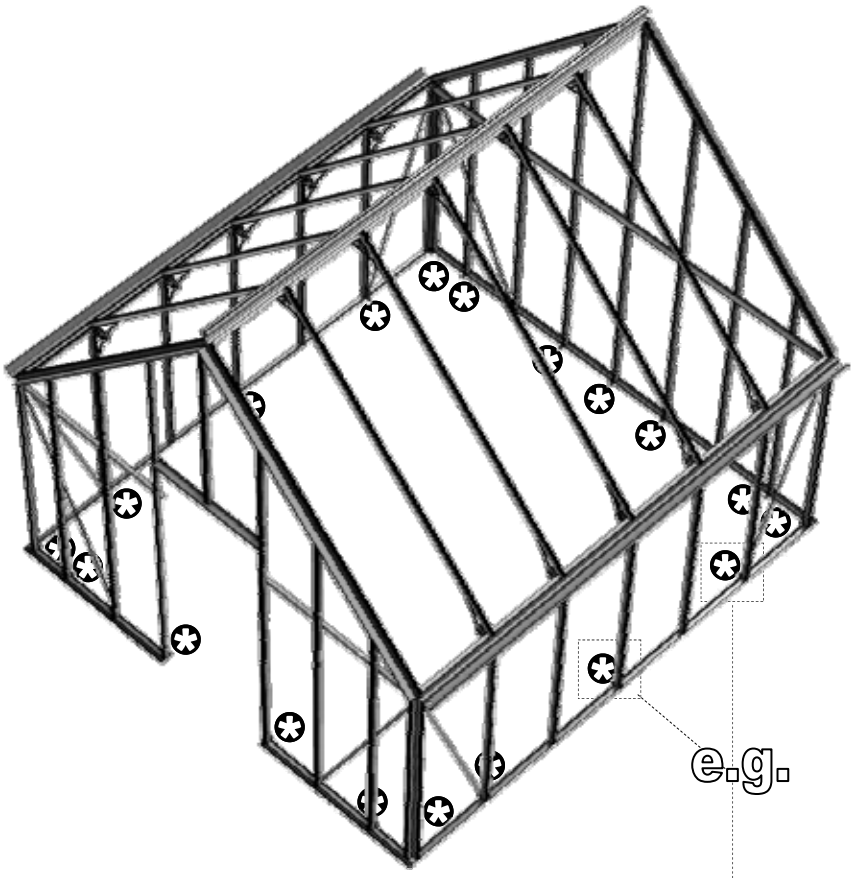

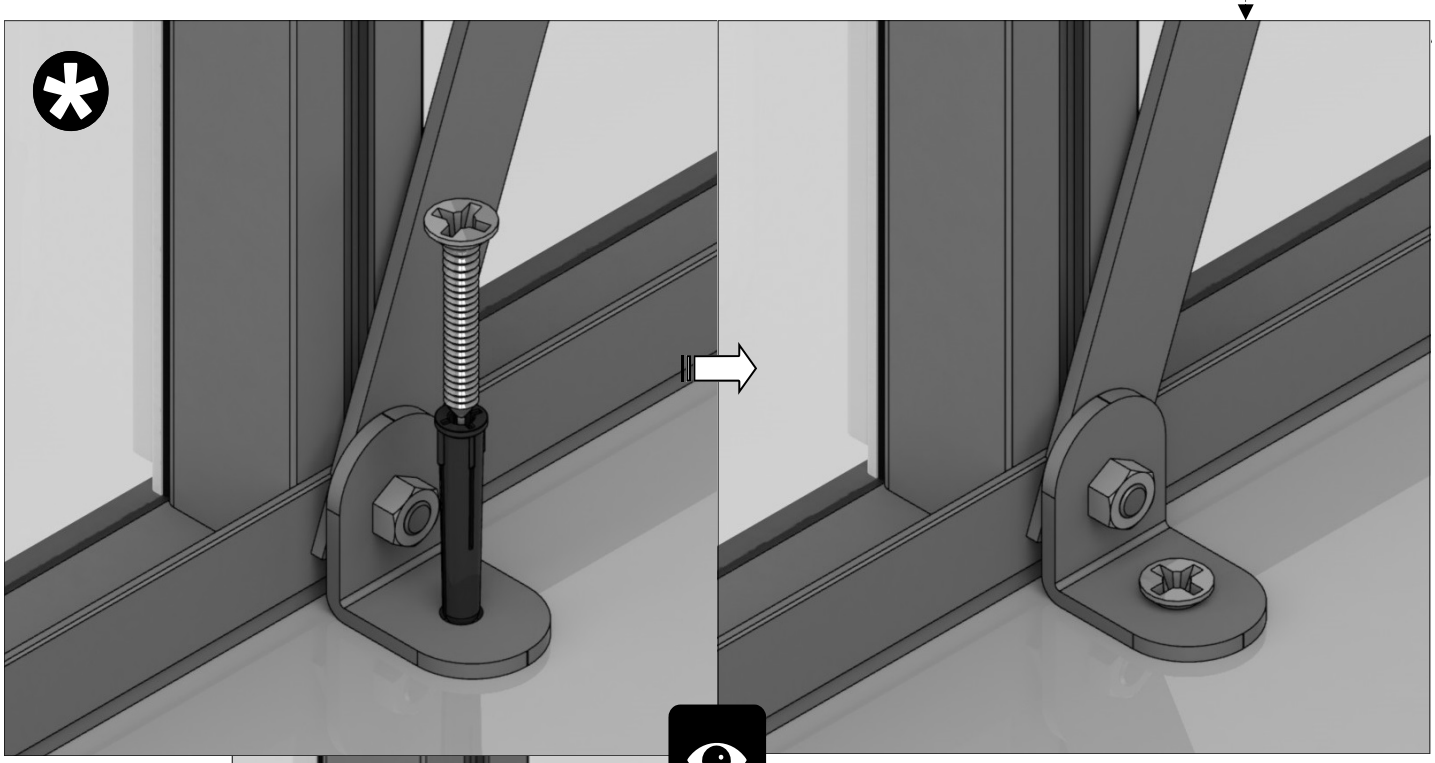

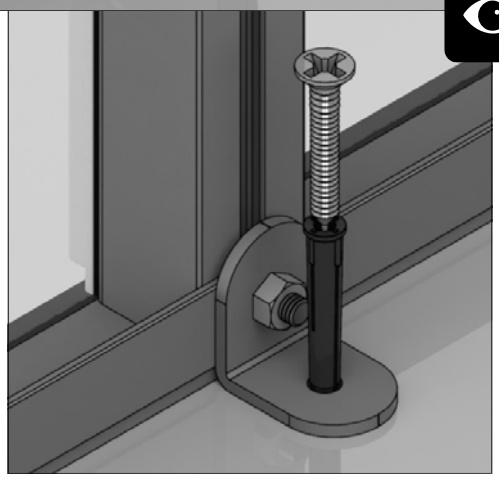

11

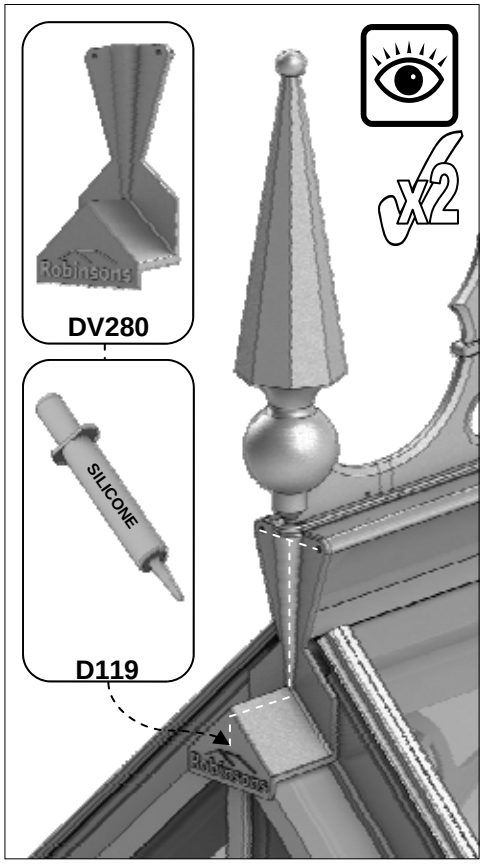
x2
DV280
SILICONE
D119

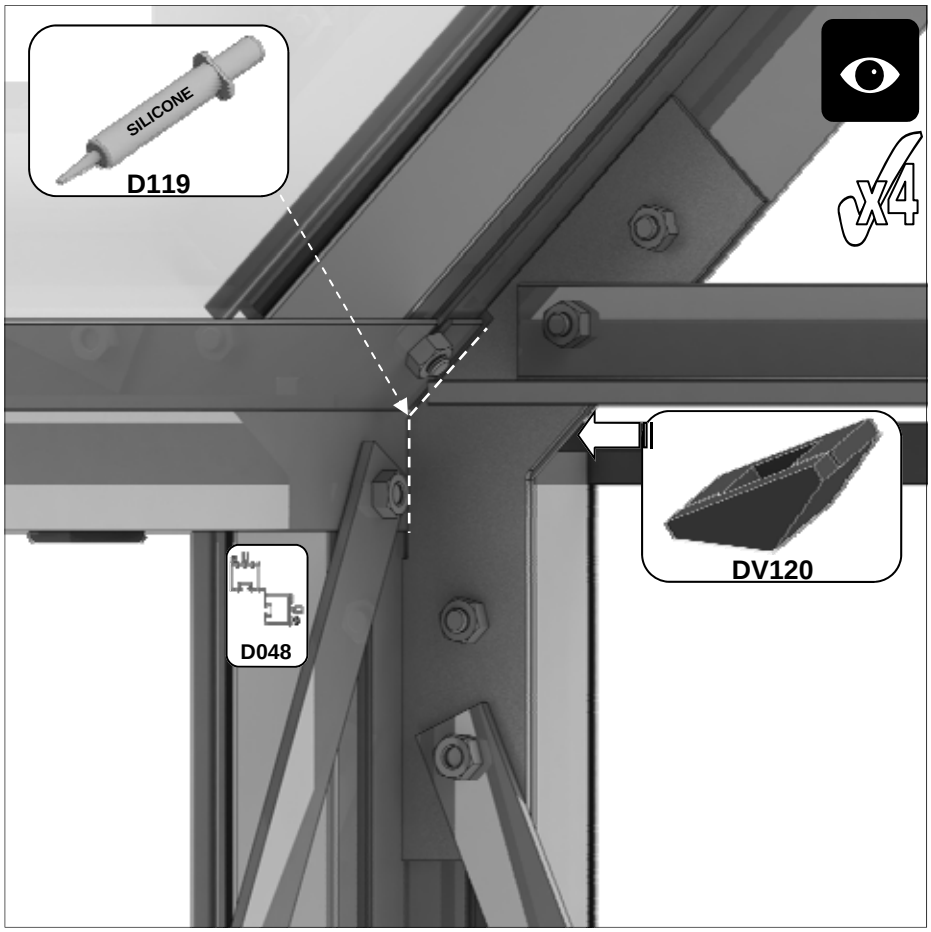
SILICONE
D119
x4
DV120
D048

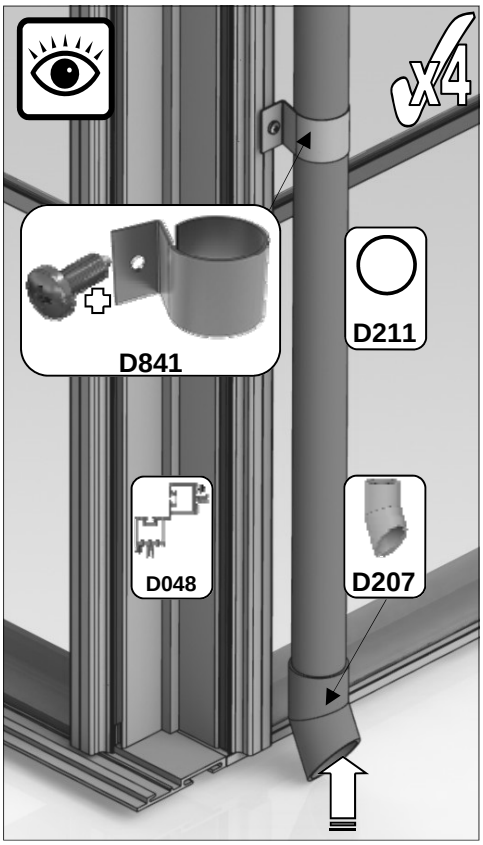
x4
D841
D211
D048
D207

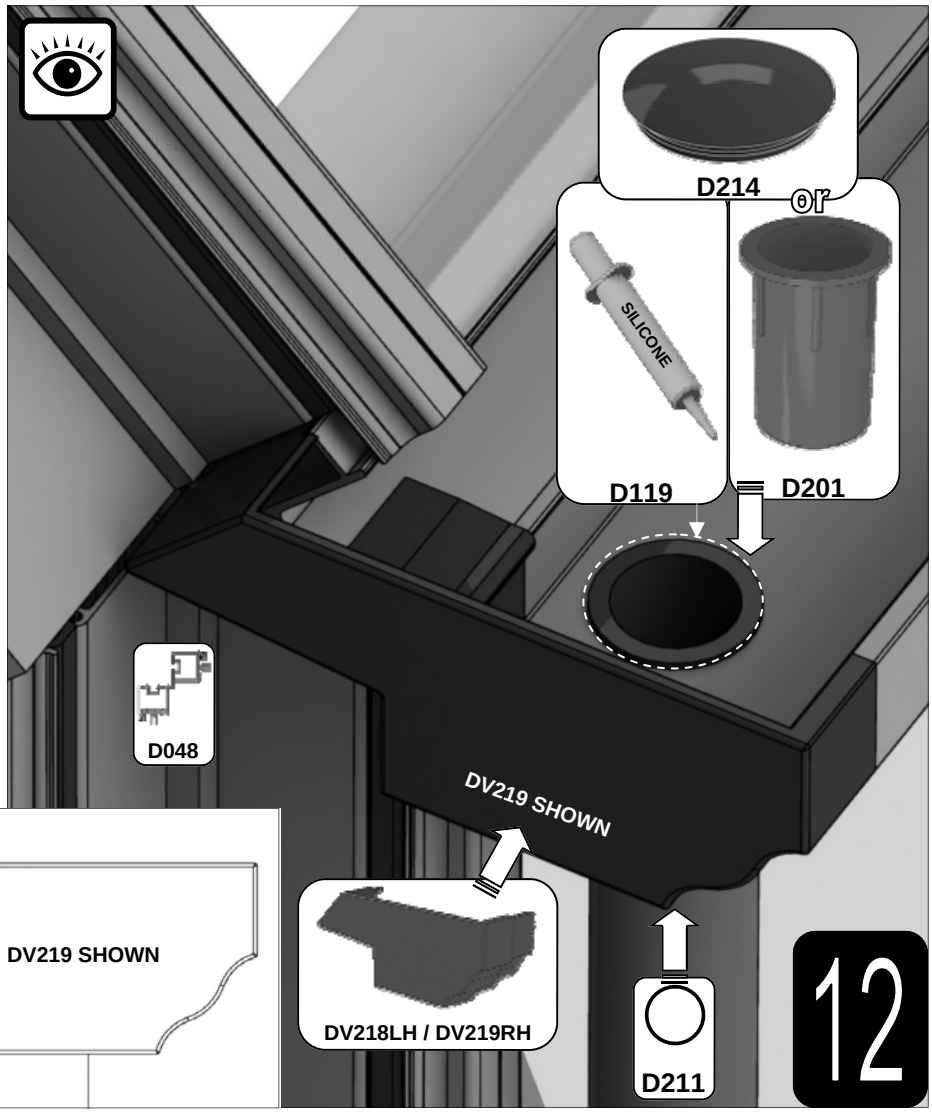
D214
or
SILICONE
D119
D201
D048
DV219 SHOWN
DV218LH / DV219RH
D211
12

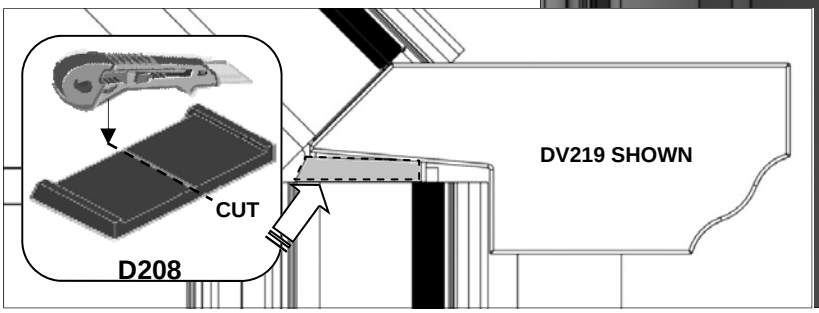
CUT
D208
DV219 SHOWN

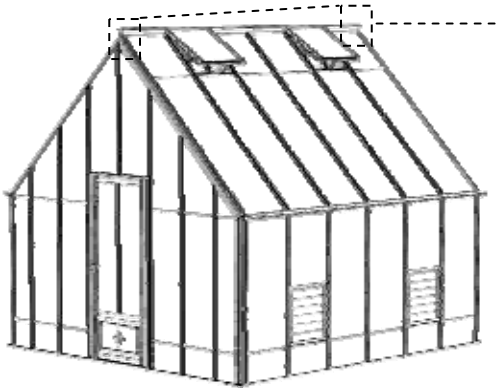

Part No		Quantity
SYBOLM6 X22CROP		8
SYNUTM6		8

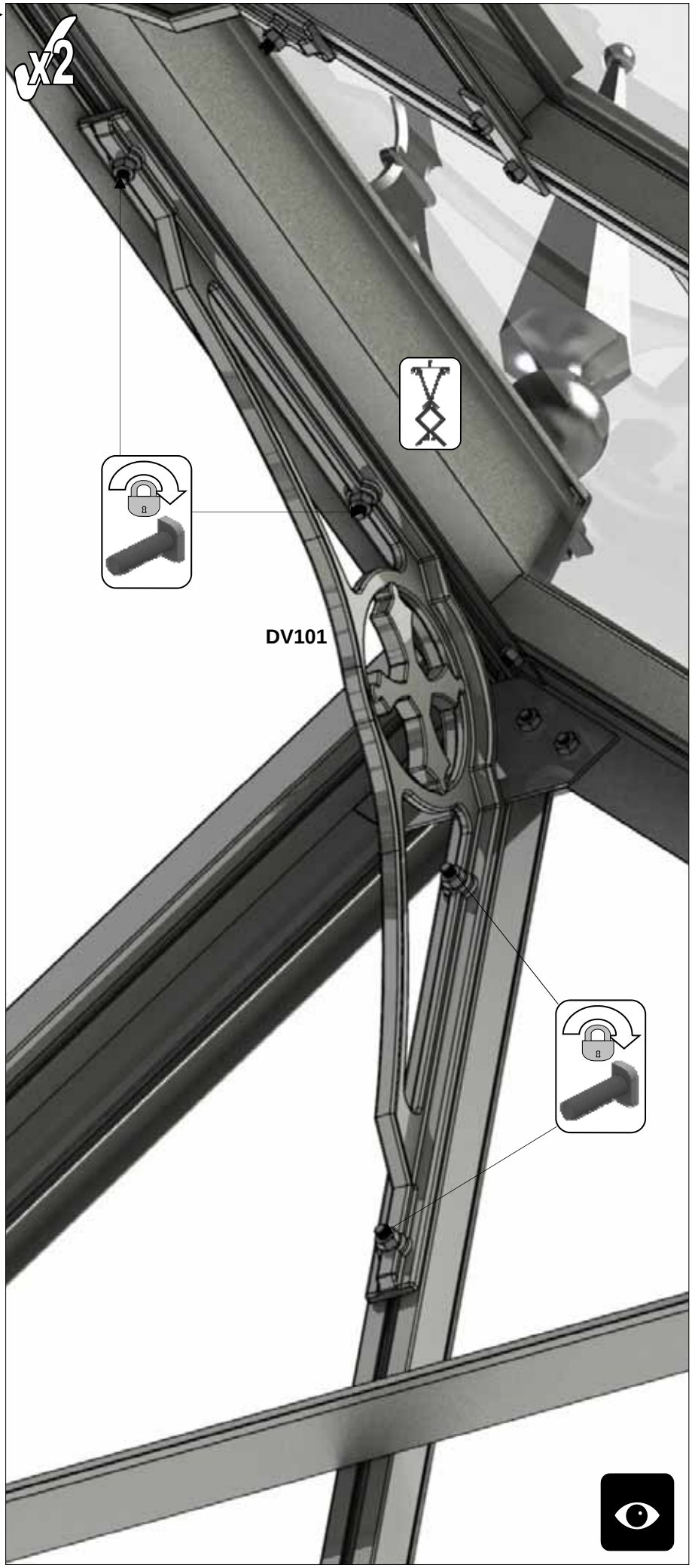

12

Example: 2x 4' 3 slat shelves 'ST0304' = 8' run

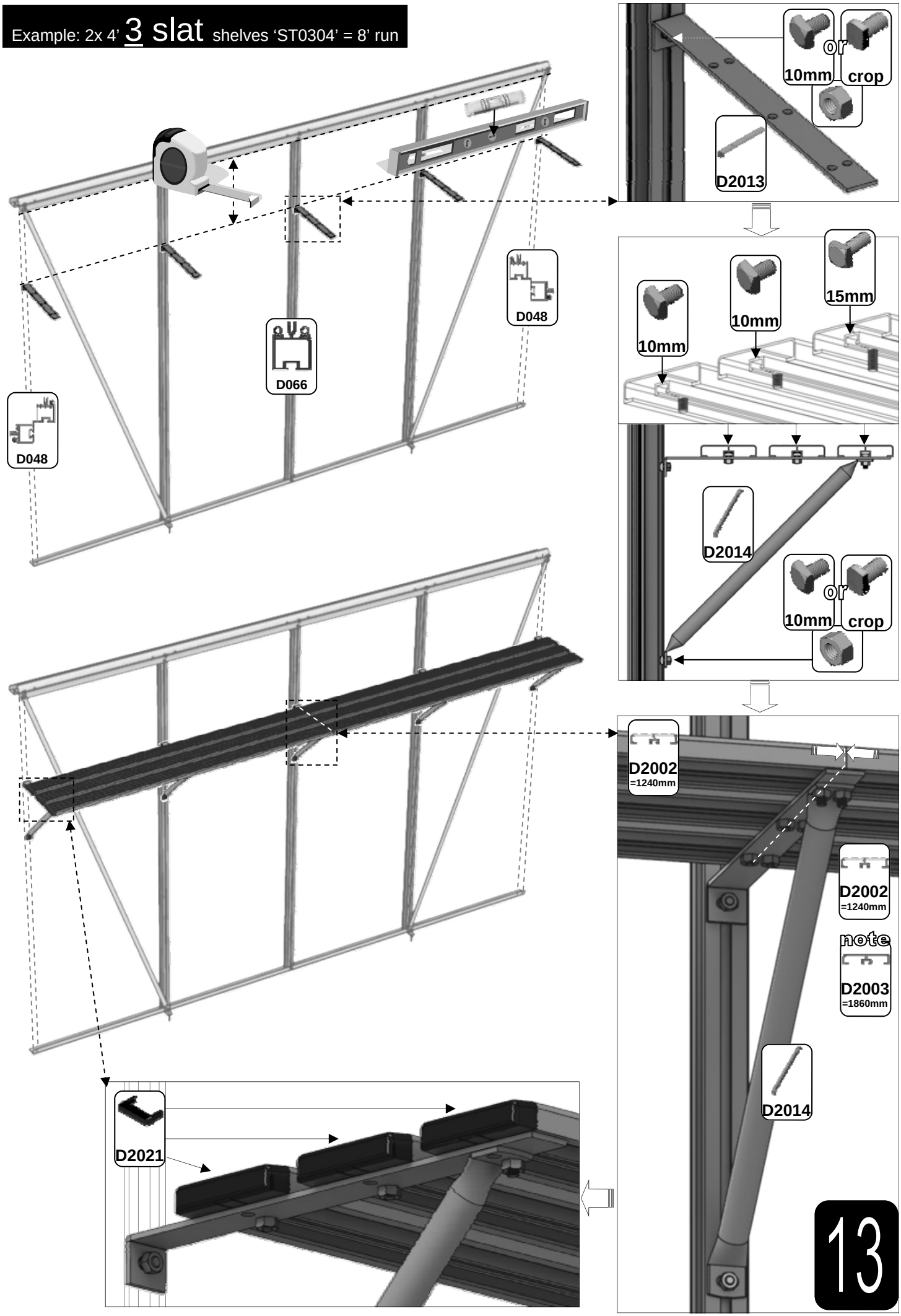

Example: 2x 4' 7 slat staging 'ST0704' = 8' run

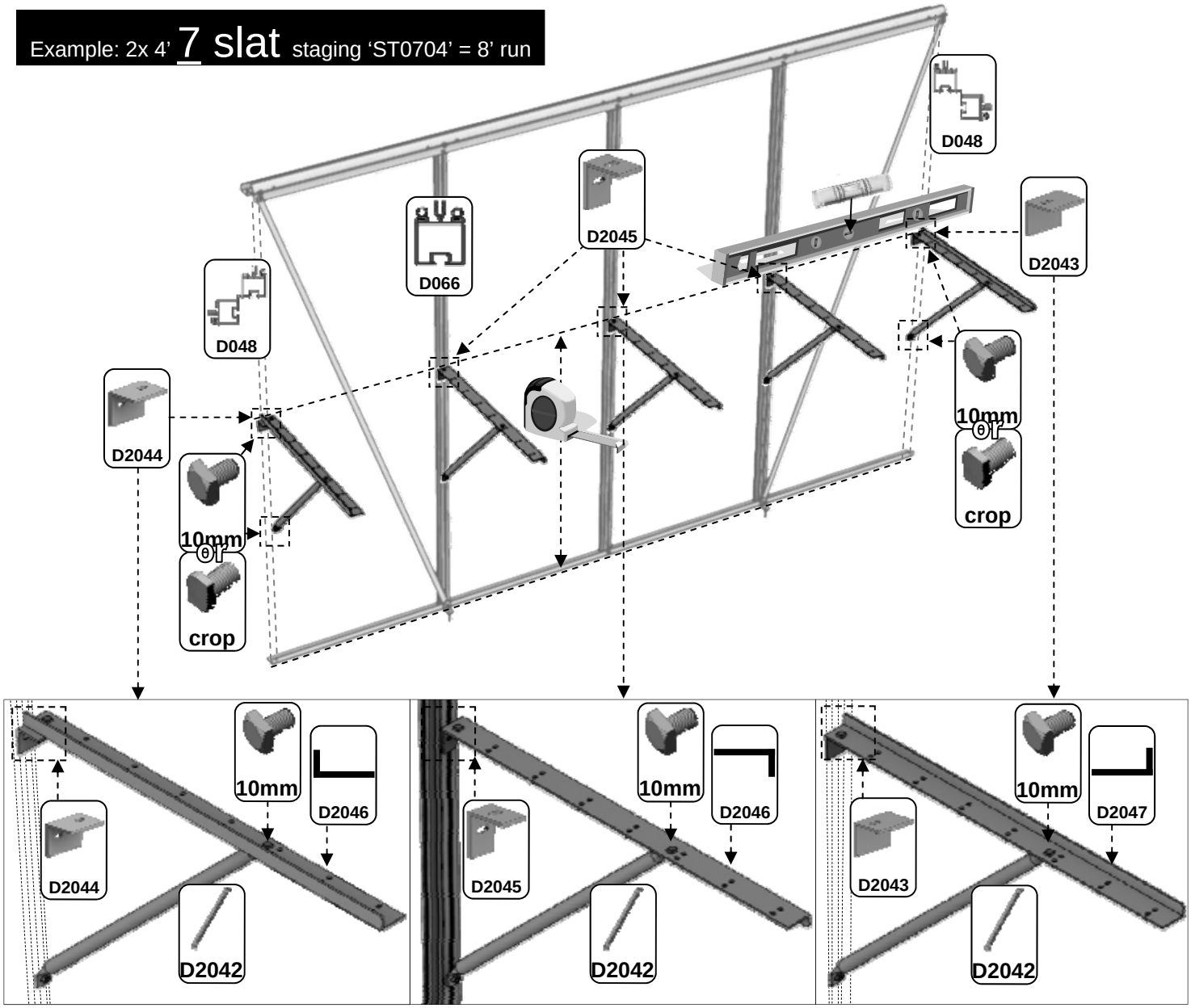

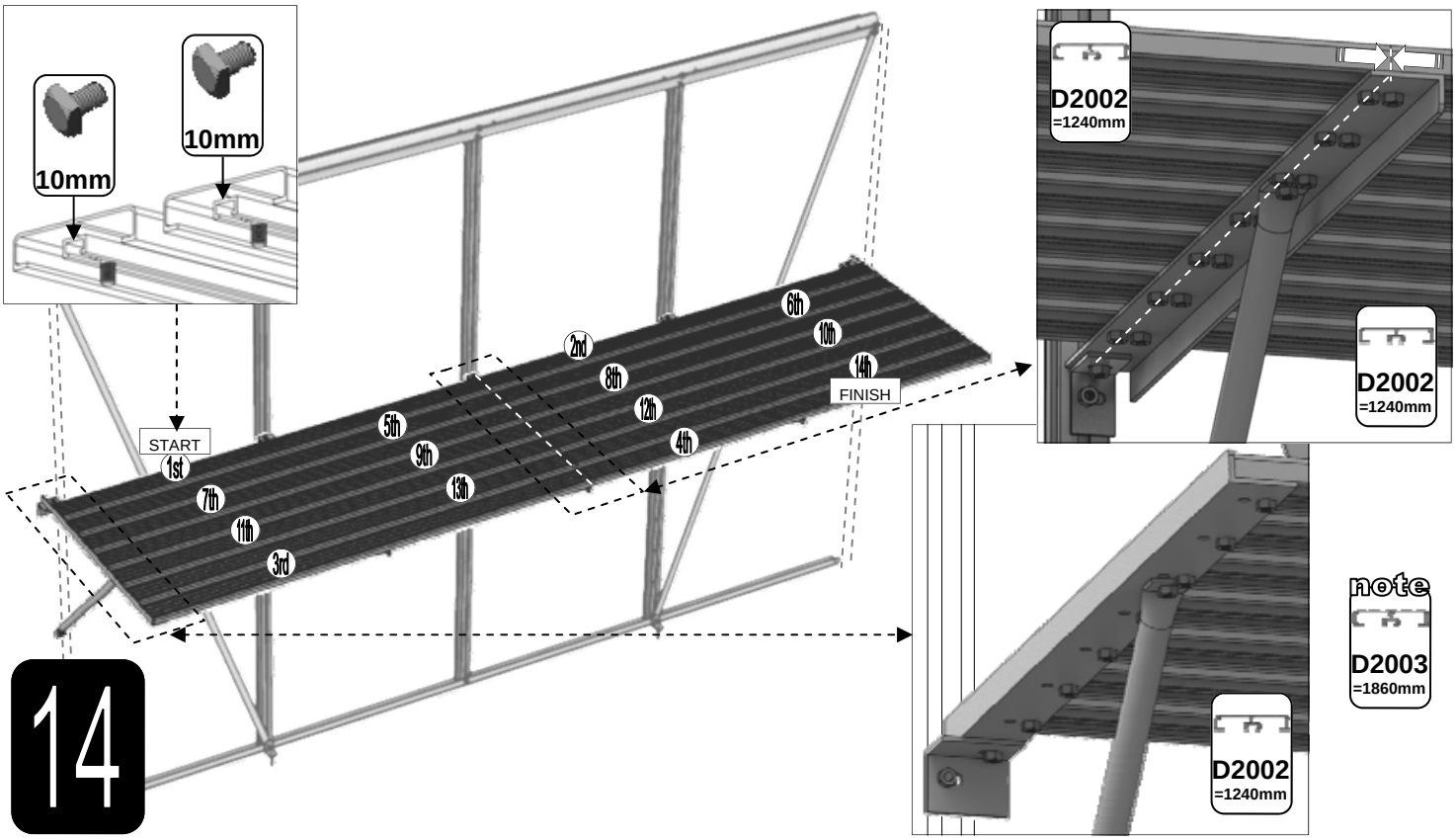

14

Example: 2x 4' 10 slat staging 'ST01004' = 8' run

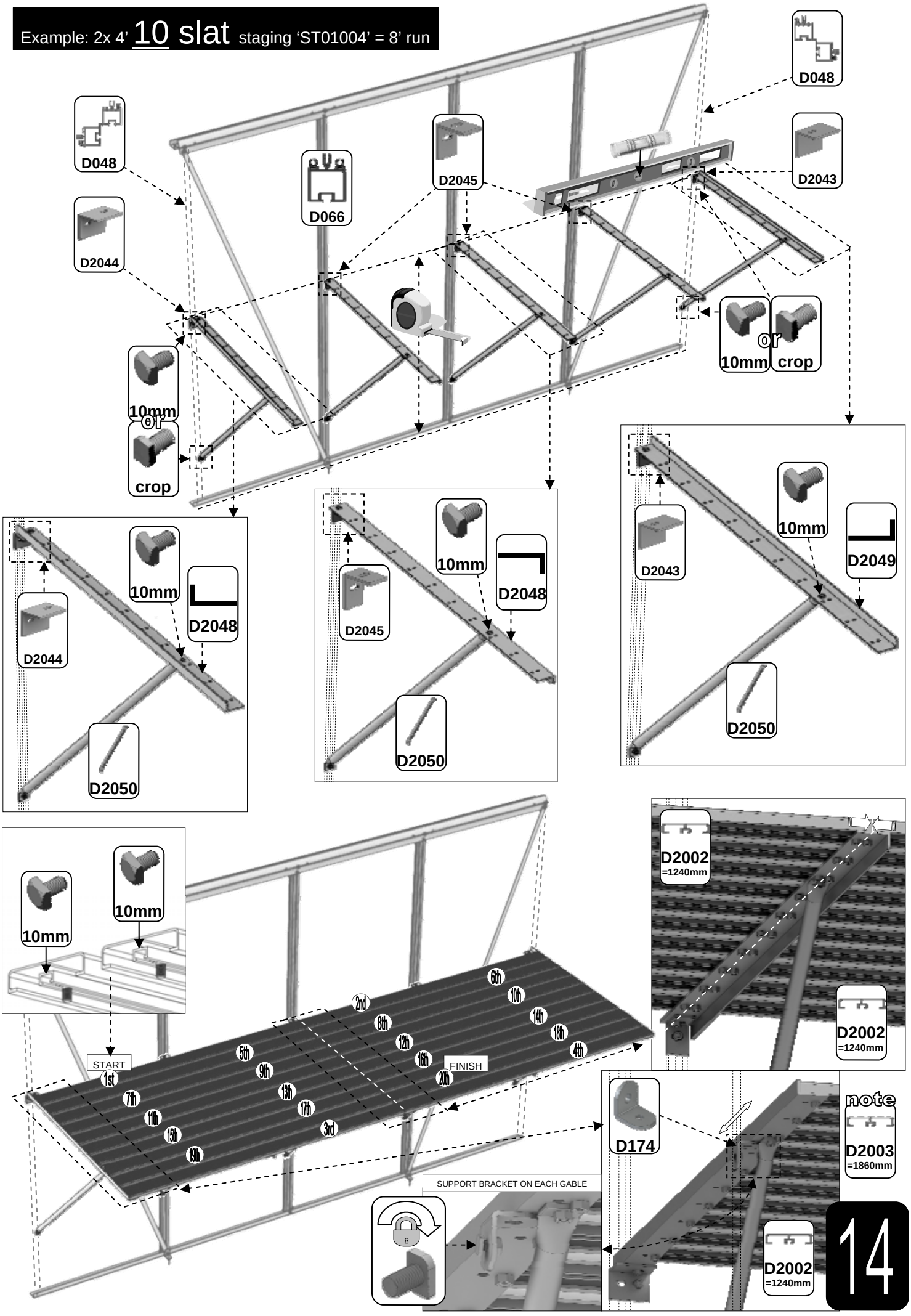

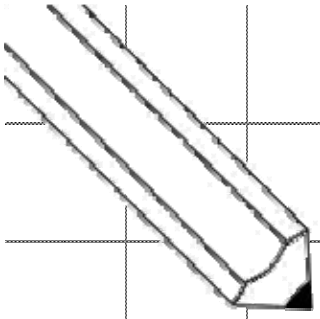

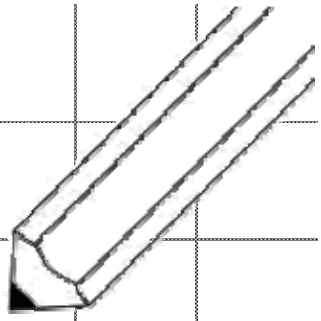

Please be aware that this is a new multi-national manual. If you spot any errors or have any constructive comments regarding the manual please email james.spooner@greenhousepeople.co.uk and I will make the necessary amendments. In addition any photographs of completed buildings would be most appreciated to add to our portfolio.

THIS GREENHOUSE BOX WAS PACKED BY: DATE:_____

_____

www.robinsonsgreenhouses.co.uk

To contact Robinsons Customer Services email us at sales@robinsonsgreenhouses.co.uk or call us on 01782 385 409.

Our address is Robinsons Greenhouses, Unit 19 Blythe Park, Cresswell, Stoke-on-Trent, Staffordshire, ST11 9RD